Protected by copyright. Copying for private or commercial purposes, in part or in whole, is not permitted unless authorised by Volkswagen AG. Volkswagen AG does not guarantee or accept any liability with respect to the correctness of information in this document. Copyright by Volkswagen AG.

Polo Estate 1998 ➤

4-Cyl. injection engine (4 valve), Mechanics									
Engine ID	APE	AUA							

Edition 11.1999

satelettronica

List of Workshop Manual Repair GroupsList of Workshop Manual Repair GroupsList of Workshop Manual Repair Groups

Polo Estate 1998 ➤

4-Cyl. injection engine (4 valve), Mechanics

Repair Group

00 - Technical data
10 - Removing and installing engine
13 - Crankshaft group
15 - Cylinder head, Valve gear
17 - Lubrication
19 - Cooling system
20 - Fuel supply system
26 - Exhaust system

Protected by copyright. Copying for private or commercial purposes, in part or in whole, is not permitted unless authorised by Volkswagen AG. Volkswagen AG does not guarantee or accept any liability with respect to the correctness of information in this document. Copyright by Volkswagen AG.

satelettronica

Technical information should always be available to the foremen and mechanics, because their careful and constant adherence to the instructions is essential to ensure vehicle road-worthiness and safety. In addition, the normal basic safety precautions for working on motor vehicles must, as a matter of course, be observed.

All rights reserved.
No reproduction without prior agreement from publisher.

Copyright © 2011 Volkswagen AG, Wolfsburg

00056407620

Contents

00 - Technical data . . . 1

1 **Technical data** . . . 1
1.1 Technical data . . . 1
1.2 Engine number . . . 1
1.3 Engine data . . . 1

10 - Removing and installing engine . . . 3

1 **Removing and installing engine** . . . 3
1.1 Removing and installing engine . . . 3
1.2 Notes on removing . . . 4
1.3 Securing engine to assembly stand . . . 6
1.4 Notes on installing . . . 6
1.5 Tightening torques . . . 7
1.6 Assembly mountings . . . 8
1.7 Replacing engine carrier rubber mounting . . . 9
1.8 Additional information and removal instructions for vehicles with air conditioner . . . 10

13 - Crankshaft group . . . 12

1 **Dismantling and assembling engine** . . . 12
1.1 Dismantling and assembling engine . . . 12
1.2 Removing and installing ribbed belt . . . 21
1.3 Checking valve timing . . . 22
1.4 Removing, installing and tensioning toothed belts . . . 24
1.5 Checking semi-automatic toothed belt tensioning roller . . . 30

2 **Removing and installing cylinder block, sealing flange and flywheel** . . . 33
2.1 Removing and installing cylinder block, sealing flange and flywheel . . . 33
2.2 Aluminium cylinder block . . . 34
2.3 Renewing crankshaft oil seal -belt pulley end- . . . 37
2.4 Renewing crankshaft sealing flange -flywheel end- . . . 39
2.5 Crankshaft dimensions . . . 48

3 **Dismantling and assembling pistons and conrods** . . . 49
3.1 Dismantling and assembling pistons and conrods . . . 49
3.2 Piston and cylinder dimensions . . . 55

15 - Cylinder head, Valve gear . . . 56

1 **Removing and installing cylinder head** . . . 56
1.1 Removing and installing cylinder head . . . 56
1.2 Removing and installing camshaft housing . . . 60
1.3 Removing and installing cylinder head . . . 63
1.4 Checking compression pressures . . . 67

2 **Servicing valve gear** . . . 69
2.1 Servicing valve gear . . . 69
2.2 Reworking valve seats . . . 77
2.3 Replacing camshaft oil seals . . . 79
2.4 Checking valve guides . . . 81
2.5 Renewing valve guides . . . 81
2.6 Renewing valve stem seals . . . 82

17 - Lubrication . . . 85

1 **Removing and installing parts of the lubrication system** . . . 85
1.1 Removing and installing parts of the lubrication system . . . 85
1.2 Removing and installing oil sump . . . 90
1.3 Removing and installing oil pump . . . 92

Protected by copyright. Copying for private or commercial purposes, in part or in whole, is not permitted unless authorised by Volkswagen AG. Volkswagen AG does not guarantee or accept any liability with respect to the correctness of information in this document. Copyright by Volkswagen AG.
satelettronica

1.4 Checking oil pressure and oil pressure switch 95

19 - Cooling system 97

1 Removing and installing parts of cooling system 97
1.1 Removing and installing parts of cooling system 97
1.2 Parts of cooling system body side 98
1.3 Parts of cooling system engine side 101
1.4 Coolant hose connection diagram 106
1.5 Draining and filling cooling system 107
1.6 Removing and installing radiator 109
1.7 Removing and installing coolant pump 111

20 - Fuel supply system 113

1 Removing and installing parts of fuel supply system 113
1.1 Removing and installing parts of fuel supply system 113
1.2 Removing and installing fuel tank with its attachments, Polo Classic, Polo Estate 114
1.3 Removing and installing fuel tank with its attachments, Caddy 119
1.4 Safety precautions when working on the fuel supply system 124
1.5 Rules for cleanliness 124
1.6 Removing and installing fuel delivery unit 125
1.7 Removing and installing fuel gauge sender 126
1.8 Removing and installing fuel tank 126
1.9 Crash fuel shut-off 128
1.10 Checking fuel pump 129

2 Checking electronic power control (EPC) 136
2.1 Checking electronic power control (EPC) 136
2.2 Function of EPC system 138
2.3 Checking accelerator pedal position sender 139

3 Activated charcoal filter system 142
3.1 Activated charcoal filter system 142
3.2 Function 142
3.3 Servicing parts of the activated charcoal filter system 143
3.4 Checking fuel tank breather 145

26 - Exhaust system 147

1 Removing and installing parts of exhaust system 147
1.1 Removing and installing parts of exhaust system 147
1.2 Exhaust manifold, front exhaust pipe and catalyst with attachments 148
1.3 Silencer with mountings 151

2 Exhaust gas recirculation system 153
2.1 Exhaust gas recirculation system 153
2.2 Servicing parts of exhaust gas recirculation system 154
2.3 Checking potentiometer for exhaust gas recirculation (G212) 156

Protected by copyright. Copyright by Volkswagen AG. Volkswagen AG does not guarantee or accept any liability with respect to the correctness of information in this document.
satelettronica

00 - Technical data

1 - Technical data

1.1 - Technical data

1.2 - Engine number

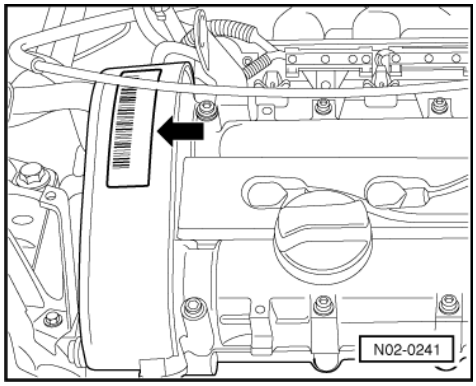

-> Engine code and engine number can be found on the sticker -arrow- on the toothed belt guard.

The engine code is also on the vehicle data plate and on the crankcase above the gearbox.

The engine number consists of up to nine characters (alphanumeric). The first part (maximal 3 characters) makes up the "engine code", and the second part (6 characters), the "serial number". If more than 999,999 engines with the same engine code are produced, the first of the six characters is replaced with a letter.

1.3 - Engine data

Codes		APE	AUA
Manufactured		11.99 ▸	06.00 ▸
Exhaust emissions fulfil		D4 standard	EU4 standard
Capacity	cm3	1390	1390
Output	kW at rpm	55/5000	55/5000
Torque	Nm at rpm	126/3900	126/3900
Bore	mm ø	76.5	76.5
Stroke	mm	75.6	75.6
Compression ratio		10.5:1	10.5:1
RON	min.	95 unleaded1)	95 unleaded1)
Injection, ignition		4LV	4LV
Knock control		yes	yes
Self-diagnosis		yes	yes
Lambda regulation		yes2)	yes2)
Catalyst		yes	yes

Protected by copyright. Copying for private or commercial purposes, in part or in whole, is not permitted unless authorised by Volkswagen AG. Volkswagen AG does not guarantee or assume any liability with respect to the correctness of information in this document. Copyright by Volkswagen AG.
satelettronica

Codes	APE	AUA
Exhaust gas recirculation	yes	yes
Charging	no	no

1) In exceptional circumstances min. 91 RON, however with reduced performance

2) With 2 Lambda probes

Protected by copyright. Copying for private or commercial purposes, in part or in whole, is not permitted unless authorised by Volkswagen AG. Volkswagen AG does not guarantee or accept any liability with respect to the correctness of information in this document. Copyright by Volkswagen AG.
satelettronica

10 - Removing and installing engine

1 - Removing and installing engine

1.1 - Removing and installing engine

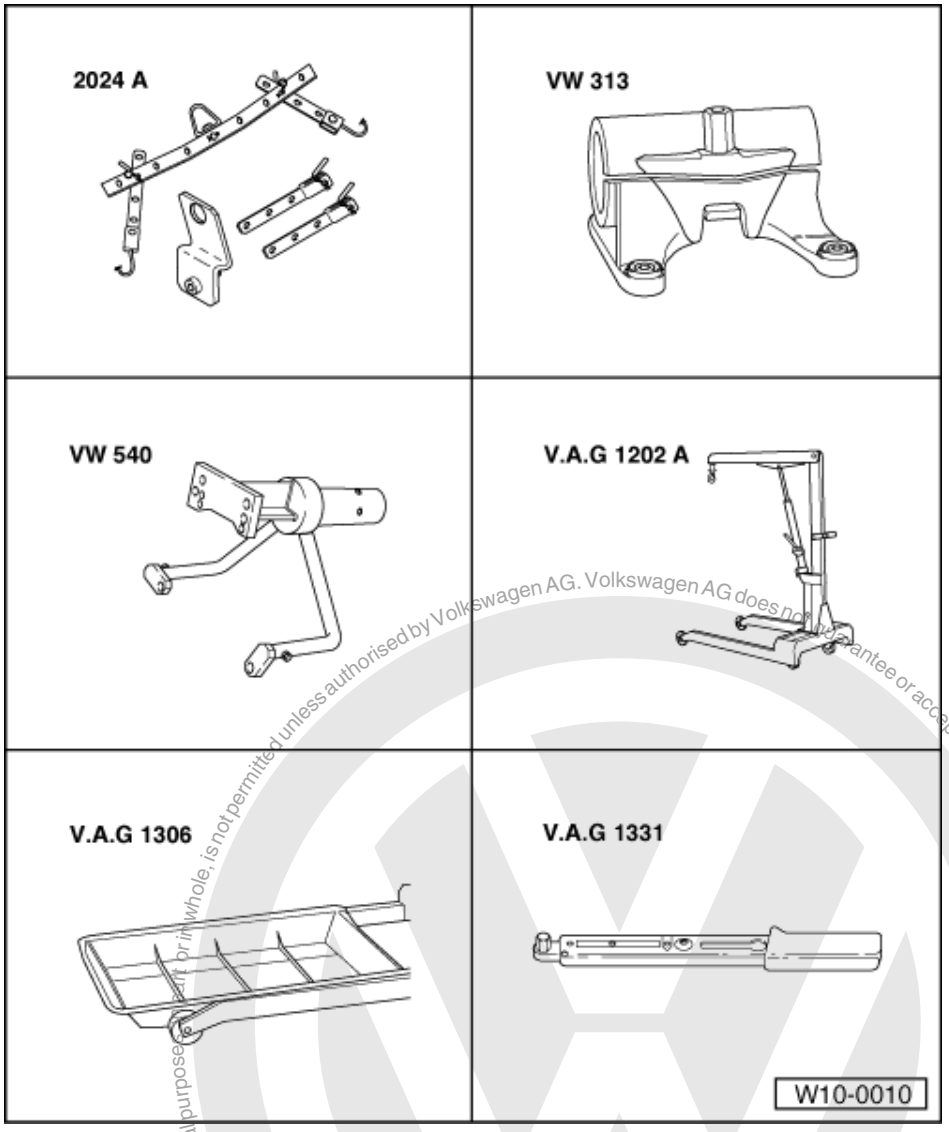

Special tools, workshop equipment, test and measuring appliances and auxiliary items required

- 2024 A Lifting tackle
- VW 313 Support clamp
- VW 540 Engine and gearbox support
- V.A.G 1202 A Workshop crane
- V.A.G 1306 Drip tray
- V.A.G 1331 Torque wrench (5...50 Nm)

Protected by copyright. Copying for private or commercial purposes, in part or in whole, is not permitted unless authorised by Volkswagen AG. Volkswagen AG does not guarantee or accept any liability with respect to the correctness of information in this document. Copyright by Volkswagen AG.
satelettronica

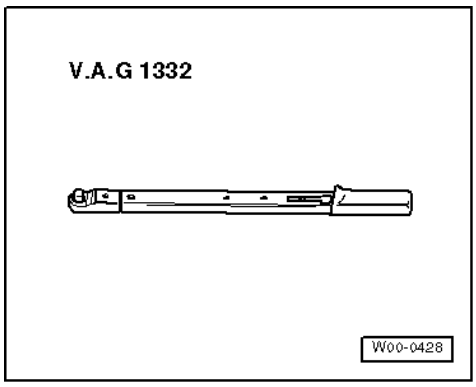

- V.A.G 1332 Torque wrench (40...200 Nm)

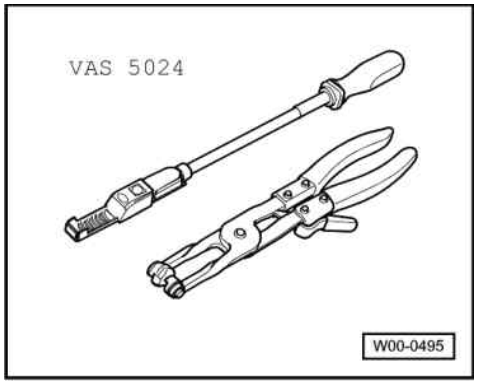

- VAS 5024 Assembly tool for spring-type clips
- G 000 100 grease (vehicles with manual gearbox)
- Cable tie

1.2 - Notes on removing

Note:

Check whether a coded radio is installed as during the forthcoming work sequences the battery earth strap must be disconnected. Obtain radio code first if necessary.

- The engine is removed forwards together with the gearbox.
- With ignition switched off disconnect battery earth strap.
- All cable ties which are opened or cut open when removing engine, must be replaced in the same position when installing engine.
- Remove engine cover.
- Open and close the expansion tank sealing cap to release pressure in cooling system.
- Disconnect all electric wires from gearbox, alternator and starter and move clear.
- Pull off/disconnect all other electrical connections as necessary from engine and lay to one side.
- Remove air cleaner together with air intake connecting piece:

=> Repair group 24; Servicing injection; Dismantling and assembling air cleaner Servicing injection Dismantling and assembling air cleaner

- Disconnect fuel supply and fuel return pipes at fuel rail.

Warning!
Fuel supply lines are under pressure! Before removing from hose connection wrap a cloth around the connection. Then release pressure by carefully pulling hose off connection.

- Pull vacuum and breather hoses off engine.
- Pull connectors off thermo-switch and radiator fan.
- Remove noise insulation tray.

Copyright by Volkswagen AG. Volkswagen AG does not guarantee or accept any liability with respect to the correctness of information in this document. Copyright by Volkswagen AG. Protected by copyright. Copying for private or commercial purposes, in part or in whole, is not permitted unless authorised by Volkswagen AG.
satelettronica

- Separate front exhaust pipe from exhaust manifold => Page 148 , exhaust manifold, front exhaust pipe and catalyst with attachments.
- Disconnect clutch cable:

=> Repair group 30; Servicing hydraulic clutch control Servicing hydraulic clutch control

- Disconnect selector mechanism from gearbox.

=> Repair group 34; Servicing gear change mechanism Servicing gear change mechanism

- Drain coolant => Page 107 .
- Loosen hose clips and pull coolant hoses off coolant thermostat housing.
- Loosen belt pulley securing bolts from power steering vane pump.
- Remove ribbed belt => Page 21 .
- Unbolt power steering vane pump and secure to sub-frame with wire; hoses remain connected:

=> Running gear; Repair group 48; Assembly overview: vane pump, reservoir, hydraulic lines; Removing and installing power steering vane pump. Assembly overview: vane pump, reservoir, hydraulic lines Removing and installing power steering vane pump.

- Remove power steering reservoir and tie up.

Vehicles with air conditioner

- Removing air conditioner compressor:
- Observe additional information and removal instructions =>Page 10

Continuation for all vehicles

- Remove left and right-hand drive shaft on gearbox and tie up:

=> Running gear; Repair group 40; Servicing front suspension; Removing and installing wheel bearing, suspension strut and drive shaft Servicing front suspension Removing and installing wheel bearing, suspension strut and drive shaft

- Removing lock carrier with attachments:

=> General body repairs; Repair group 50; Body, front; Removing and installing lock carrier with attachments. Body, front Removing and installing lock carrier with attachments.

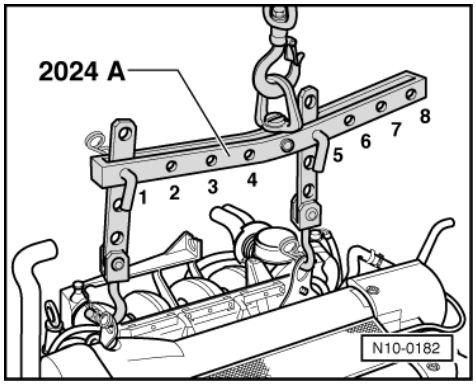

- -> Attach lifting tackle 2024 A as follows and lift slightly with workshop crane:

  Pulley end:
  3rd hole in hook at position 1

  Flywheel end:
  3rd hole in hook at position 5

Protected by copyright. Copying for private or commercial purposes, in part or in whole, is not permitted unless authorised by Volkswagen AG. Volkswagen AG does not guarantee or accept any liability with respect to the correctness of information in this document. Copyright by Volkswagen AG.
satelettronica

Warning!
The hooks and locating pins must be secured with locking pins.

Notes:

- The positions marked 1...4 on the bar must be towards the pulley end.
- The holes in the hook rails are counted up from the hook.

- Unbolt assembly at gearbox and engine mountings.
- Lower assembly until it is released from the gearbox mounting.
- Pull assembly out forwards. When doing this, if necessary turn assembly and lower slightly.

Note:

When the assembly is lifted off, it must be carefully guided to prevent damage to the bodywork.

1.3 - Securing engine to assembly stand

When working on the engine, it should be secured to the assembly stand support clamp VW 313 using the engine and gearbox box support VW 540.

Work sequence

- Remove gearbox.
- Secure engine to support clamp VW 313 using engine and gearbox support VW 540.

1.4 - Notes on installing

Installation is carried out in the reverse sequence, when doing this note the following:

- Check clutch release bearing for wear, renew if necessary.
- Lightly grease clutch release bearing, release bearing guide sleeve and splines on input shaft with G 000 100.
- Check whether the dowel sleeves for centralising engine/gearbox are in the cylinder block, install if necessary.
- When swinging the assembly in, ensure that clearance exists between the drive shafts.

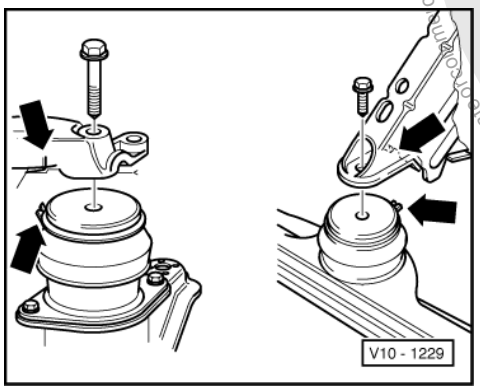

- -> When installing the engine mounting ensure that the recess on the rear console and the recess on the front console locates on the lugs of the bonded rubber mounting -arrows-.
- Align engine mountings stress-free by rocking.

Protected by copyright. Copying for private or commercial purposes, in part or in whole, is not permitted unless authorised by Volkswagen AG. Volkswagen AG does not guarantee or accept any liability with respect to the correctness of information in this document. Copyright by Volkswagen AG.
satelettronica

Note:

Assembly mounting tightening torques

=> Page 8 .

- Install drive shafts:

=> Running gear; Repair group 40; Servicing front suspension; Removing and installing wheel bearing, suspension strut and drive shaft Servicing front suspension Removing and installing wheel bearing, suspension strut and drive shaft

- Installing P.A.S. vane pump:

=> Running gear; Repair group 48; Assembly overview: vane pump, reservoir, hydraulic pipes Assembly overview: vane pump, reservoir, hydraulic pipes

Vehicles with air conditioner

- Install air conditioner compressor.

Continuation for all vehicles

- Electrical connections and routing:

=> Electrical system; Repair group 97

- Install ribbed belt => Page 21 .
- Installing clutch cable:

=> Repair group 30; Servicing hydraulic clutch control Servicing hydraulic clutch control

- Connecting selector mechanism to gearbox.

=> Repair group 34; Servicing gear change mechanism Servicing gear change mechanism

- Filling with coolant => Page 107
- Install air cleaner:

=> Repair group 24; Servicing injection system; Dismantling and assembling air cleaner. Servicing injection system Dismantling and assembling air cleaner.

- Match engine electronics control unit to throttle valve control part:

=> Repair group 24; Engine control unit; Matching engine control unit to throttle valve control part Engine control unit Matching engine control unit to throttle valve control part

- Carry out a test drive and interrogate fault memory:

=> Repair group 01; Fault memory; Interrogating and erasing fault memory of engine control unit Fault memory Interrogating and erasing fault memory of engine control unit

1.5 - Tightening torques

Bolted connection		Tightening torque
Bolts, nuts	M 6	10 Nm
	M 8	20 Nm
	M10	45 Nm
	M 12	60 Nm
in variation of this		

Protected by copyright. Copying for private or commercial purposes, in part or in whole, is not permitted unless authorised by Volkswagen AG. Volkswagen AG does not guarantee or accept any liability with respect to the correctness of information in this document. Copyright by Volkswagen AG.
satelettronica

Bolted connection	Tightening torque
Exhaust pipe to manifold	40 Nm

1.6 - Assembly mountings

Tightening torques

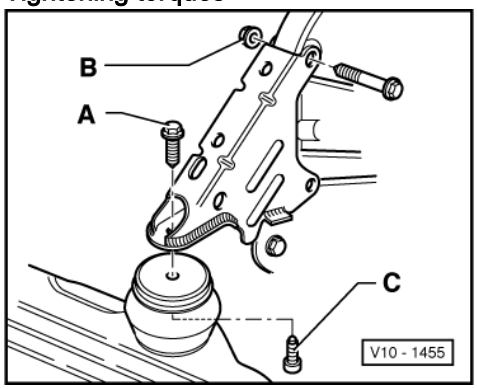

Note:
The bolts must not be used again.
(Bolts oiled)
-> Front assembly mounting
A = 50 Nm
B = 50 Nm
C = 50 Nm

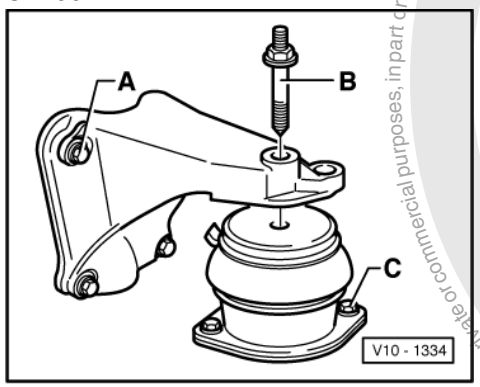

-> Rear right assembly mounting
A = 40 Nm
B = 50 Nm
C = 25 Nm

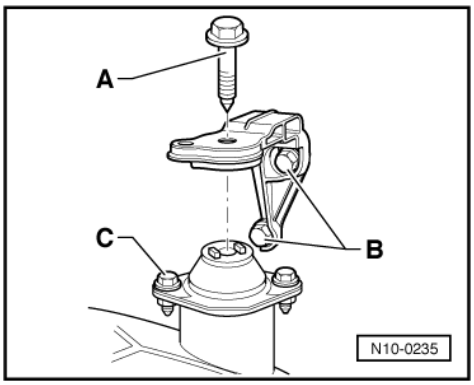

Protected by copyright. Copying for private or commercial purposes, in part or in whole, is not permitted unless authorised by Volkswagen AG. Volkswagen AG does not guarantee or accept any liability with respect to the correctness of information in this document. Copyright by Volkswagen AG.
satelettronica

Vehicles with manual gearbox

-> Gearbox mounting

A = 50 Nm
C = 45 Nm
D = 25 Nm

1.7 - Replacing engine carrier rubber mounting

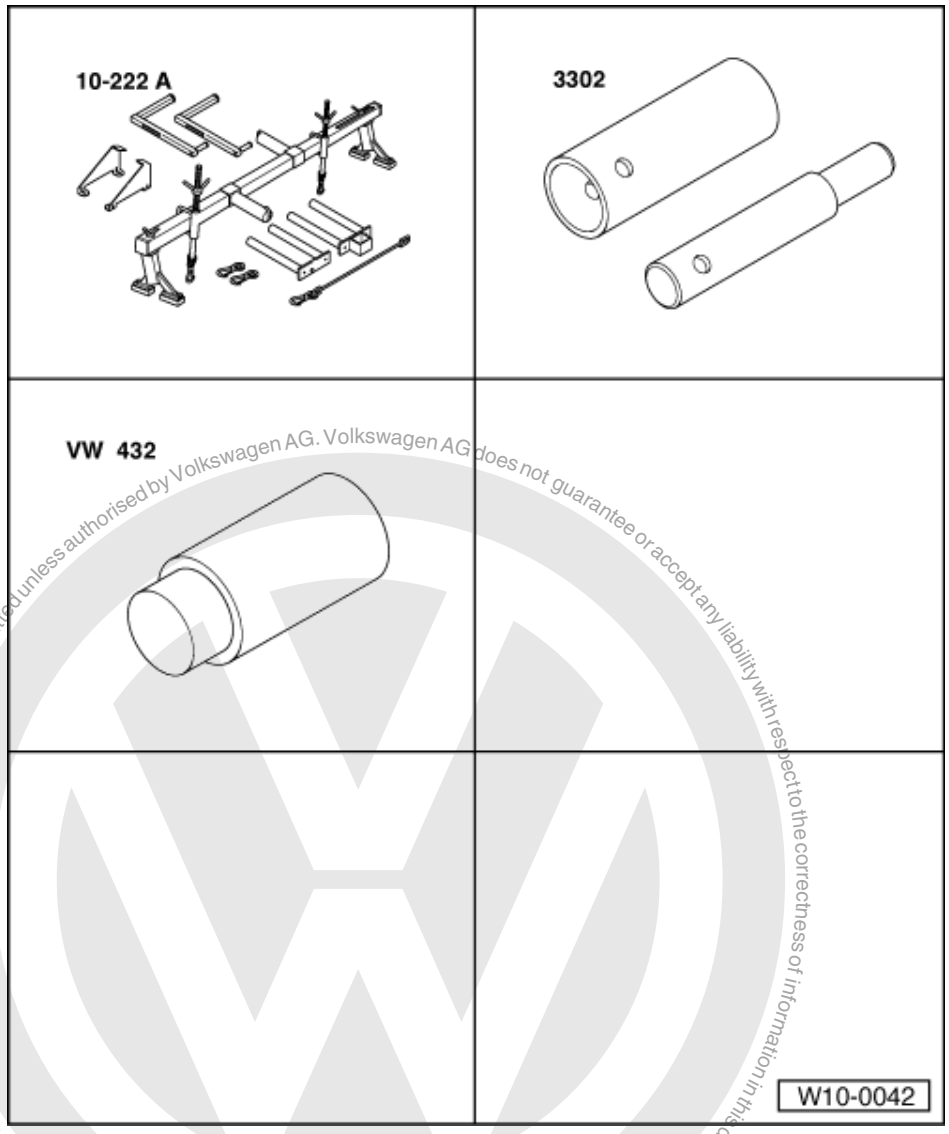

Protected by copyright. Copyright by Volkswagen AG. Volkswagen AG does not guarantee or accept any liability with respect to the correctness of information in this document. Copyright by Volkswagen AG. Protected by copyright. Copying for private or commercial purposes, in part or in whole, is not permitted unless authorised by Volkswagen AG.

satelettronica

Special tools, workshop equipment, test and measuring appliances and auxiliary items required

- 10-222A Engine support bracket with legs 10-222A/1
- 3302 Peening tool
- VW 432 Press piece

Work sequence

- Fit engine support bracket 10-222A with legs 10-222A/1.

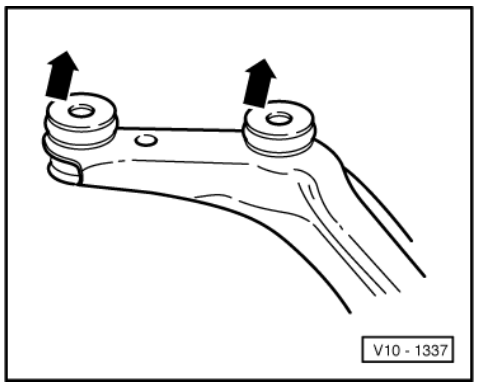

- Locate support bracket in lifting eye on left of cylinder head and take-up weight of engine.
- Remove engine carrier.
- -> Lever off washers from the spacer sleeves with pliers (replace any washers which are damaged e.g. bent washers).
- Pull out spacer sleeves and detach rubber mounting.
- Fit new rubber mounting and insert spacer sleeves as far as possible.

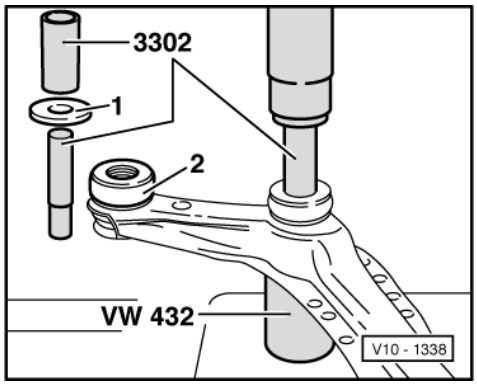

- -> Fit washers -1- over peening tool 3302 onto the rubber mounting -2-.
- Fit press sleeve of peening tool 3302 and using a press, press the washers onto the spacer sleeves and peen. Use VW 432 as packing.
- Remove any resulting protrusion/burr on the peening.

1.8 - Additional information and removal instructions for vehicles with air conditioner

Warning!
The air conditioning system refrigerant circuit must not be opened.

Note:

To prevent damage to condenser and also to the refrigerant lines/hoses, ensure that the pipes and hoses are not stretched, kinked or bent.

To facilitate removing and installing the engine without opening the refrigerant circuit:

- Detach air conditioning fluid container.
- Remove retaining clamp(s) from refrigerant pipes.
- Remove ribbed belt => Page 21 .
- Removing lock carrier with attachments:

=> General body repairs; Repair group 50; Body, front; Removing and installing lock carrier with attachments.
Body, front Removing and installing lock carrier with attachments.

Protected by copyright. Copying for private or commercial purposes, in part or in whole, is not permitted unless authorised by Volkswagen AG. Volkswagen AG does not guarantee or accept any liability with respect to the correctness of information in this document. Copyright by Volkswagen AG.
satelettronica

- Set lock carrier with radiator and condenser to the side so that the refrigerant pipes and hoses are not stressed.
- Removing air conditioner compressor:

=> Repair group 87; Air conditioner with manual control; Removing and installing compressor bracket Air conditioner with manual control Removing and installing compressor bracket

Protected by copyright. Copying for private or commercial purposes, in part or in whole, is not permitted unless authorised by Volkswagen AG. Volkswagen AG does not guarantee or accept any liability with respect to the correctness of information in this document. Copyright by Volkswagen AG.
satelettronica

13 - Crankshaft group

1 - Dismantling and assembling engine

1.1 - Dismantling and assembling engine

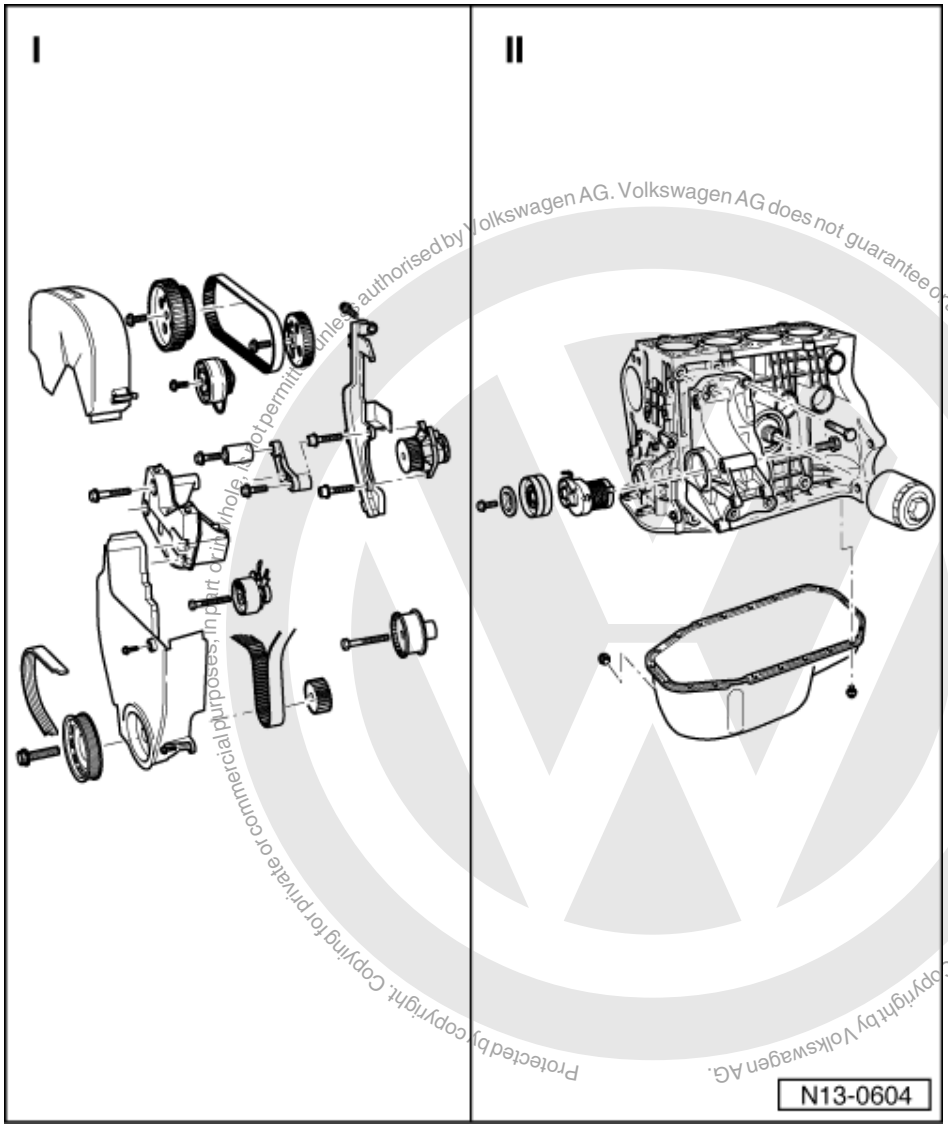

I =>Page 13

II =>Page 18

Protected by copyright. Copying for private or commercial purposes, in part or in whole, is not permitted unless authorised by Volkswagen AG. Volkswagen AG does not guarantee or accept any liability with respect to the correctness of information in this document. Copyright by Volkswagen AG.
satelettronica

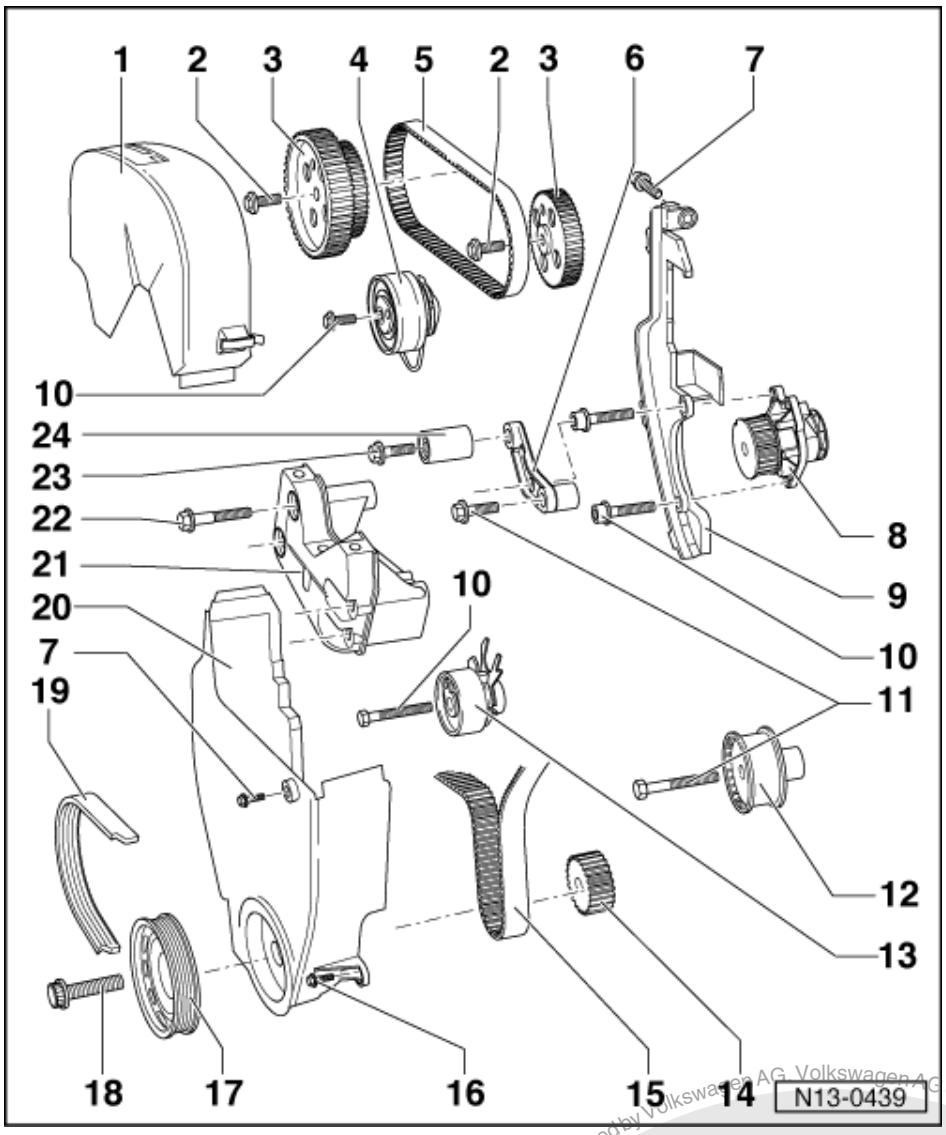

Part I

1 Toothed belt guard - upper part
2 20 Nm + 1/4 turn (90 °) further
- Renew
- Use tool T 10016 to loosen and tighten=>Page 75 , Fig. 1

3 Camshaft sprocket
- Note position when installing the toothed belt => Page 24

4 Coupling drive tensioning roller
- Checking => Page 30
- Tensioning toothed belts => Page 24

5 Coupling drive toothed belt
- Mark D.O.R. before removing
- Check for wear
- Do not kink
- Removing and installing => Page 24

satelettronica
Protected by copyright. Copying for private or commercial purposes, in part or in whole, is not permitted unless authorised by Volkswagen AG. Volkswagen AG does not guarantee or accept any liability with respect to the correctness of information in this document. Copyright by Volkswagen AG.

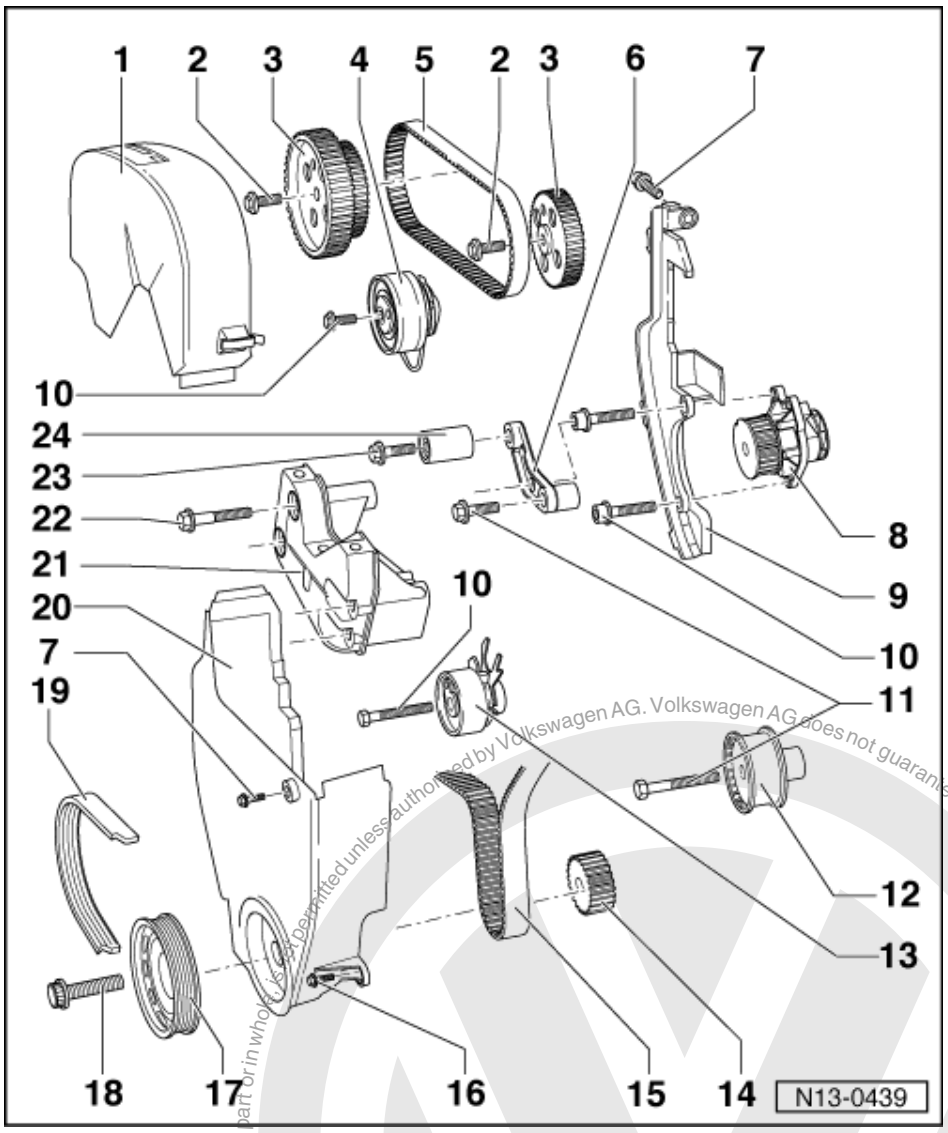

6 Bracket
7 10 Nm
8 Coolant pump
- If damaged or leaking renew complete
- Removing and installing
  => Page 111

9 Rear toothed belt guard
10 20 Nm
11 50 Nm
12 Main drive toothed belt idler roller
13 Main drive tensioning roller
- Checking => Page 30
- Tensioning toothed belts
  => Page 24

Protected by copyright. Copying for private or commercial purposes, in part or in whole, is not permitted unless authorised by Volkswagen AG. Volkswagen AG does not guarantee or accept any liability with respect to the correctness of information in this document. Copyright by Volkswagen AG.
satelettronica

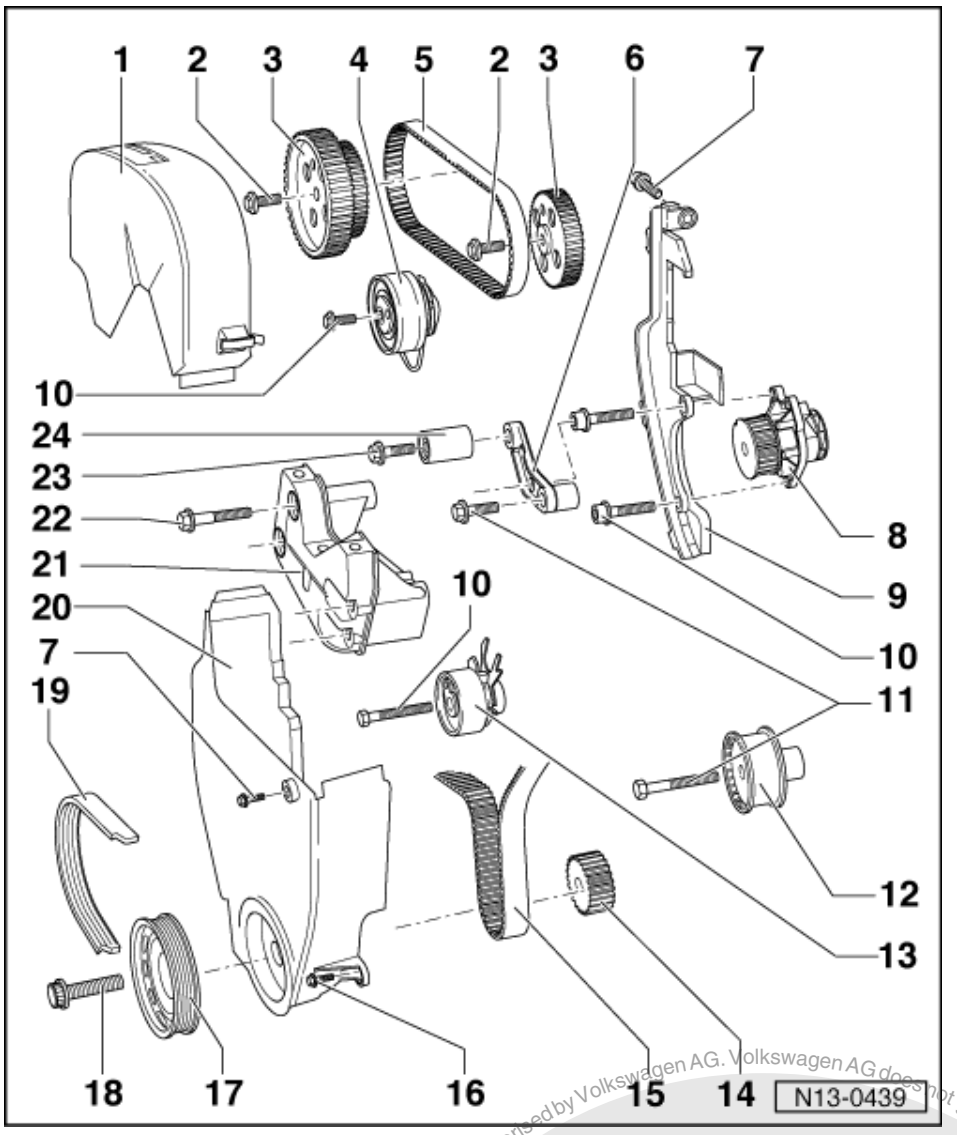

14 Crankshaft toothed belt sprocket

- Note position when installing toothed belt
  => Page 24

15 Main drive toothed belt

- Mark D.O.R. before removing
- Check for wear
- Do not kink
- Toothed belt routing => Fig. 21
- Removing, installing and tensioning
  => Page 24

16 12 Nm

- Renew

17 Belt pulley

- When installing note fixing arrangement
- Removing and installing
  => Page 24 ; Removing, installing and tensioning toothed belt

Protected by copyright. Copying for private or commercial purposes, in part or in toto, is not permitted unless authorised by Volkswagen AG. Volkswagen AG does not guarantee or accept any liability with respect to the correctness of information in this document. Copyright by Volkswagen AG.
satelettronica

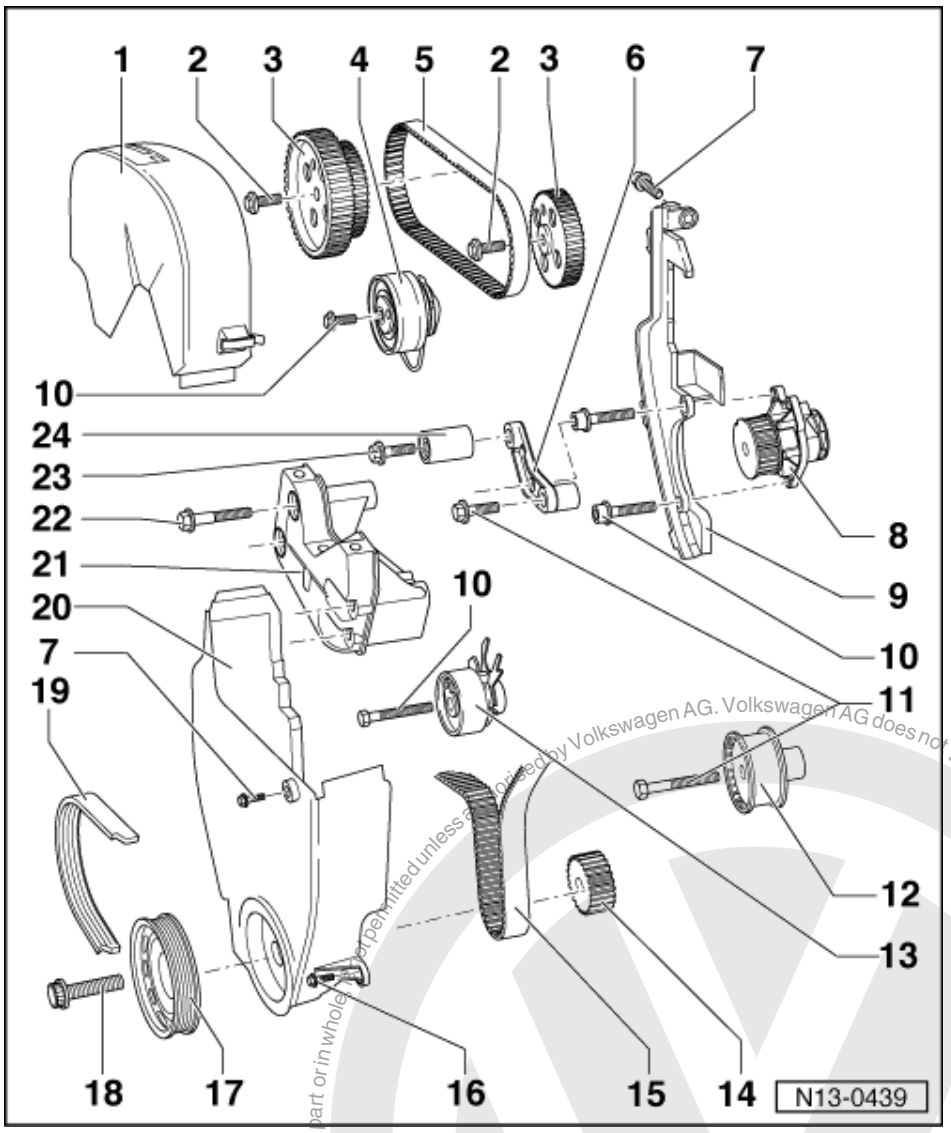

18 90 Nm + 1/4 turn (90 °) further

- Renew
- Oil threads
- The turning further can be done in several stages
- The turning further angle can be checked with a commercial protractor e.g. Hazet 6690

19 Ribbed belt

- Mark direction of rotation before removing
- Removing and installing
  => Page 21
- Ribbed belt routing
  => Page 22
- Vehicles with air conditioning system have an additional idler roller

20 Toothed belt guard - lower part

Protected by copyright. Copying for private or commercial purposes, in part or in whole, is not permitted unless authorised by Volkswagen AG. Volkswagen AG does not guarantee or accept any liability with respect to the correctness of information in this document. Copyright by Volkswagen AG.
satelettronica

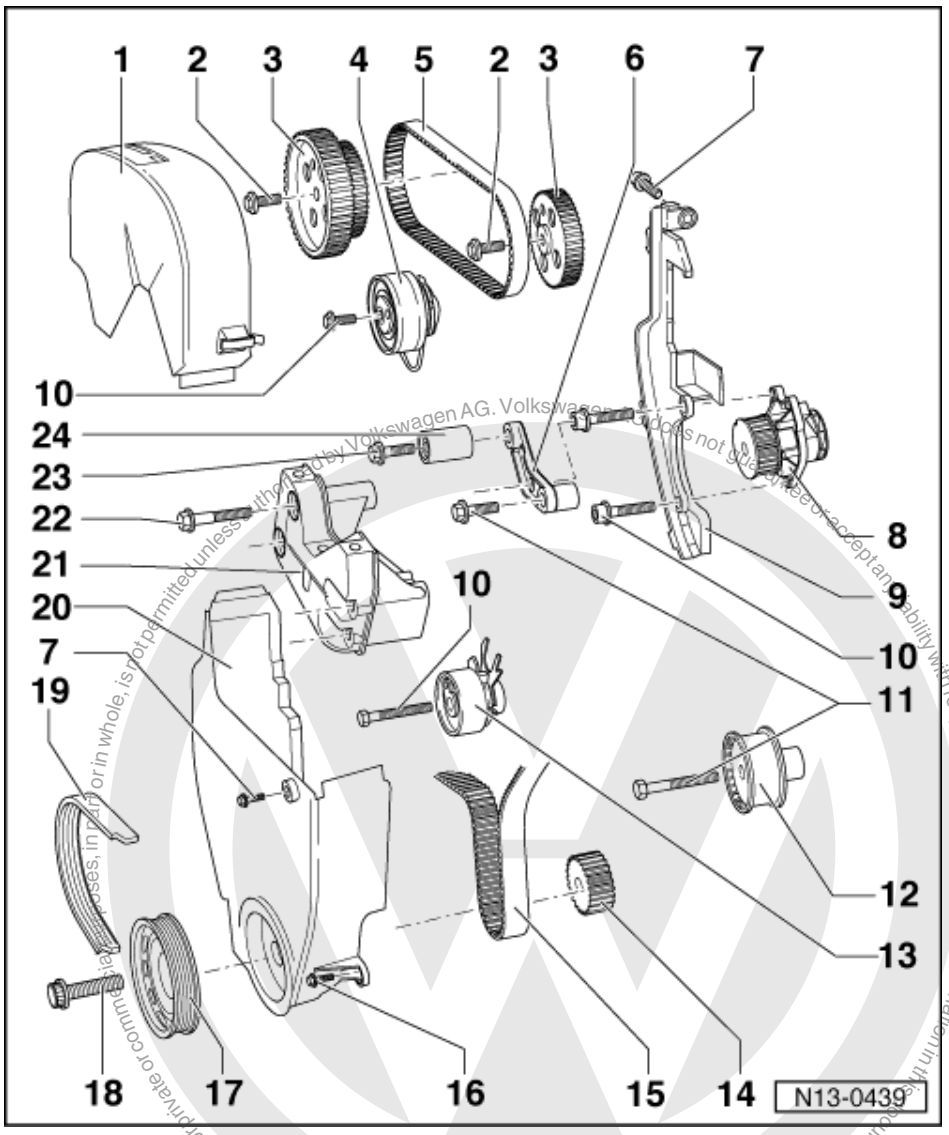

21 Console
22 50 Nm
- Renew

23 25 Nm
24 Idler roller

Protected by copyright. Copying for private or commercial purposes, in part or in whole, is not permitted unless authorised by Volkswagen AG. Volkswagen AG does not guarantee or accept any liability with respect to the correctness of information in this document. Copyright by Volkswagen AG.
satelettronica

Protected by copyright. Copying for commercial purposes, in part or in whole, is not permitted unless authorised by Volkswagen AG. Volkswagen AG does not guarantee or accept any liability with respect to the correctness of information in this document. Copyright by Volkswagen AG.

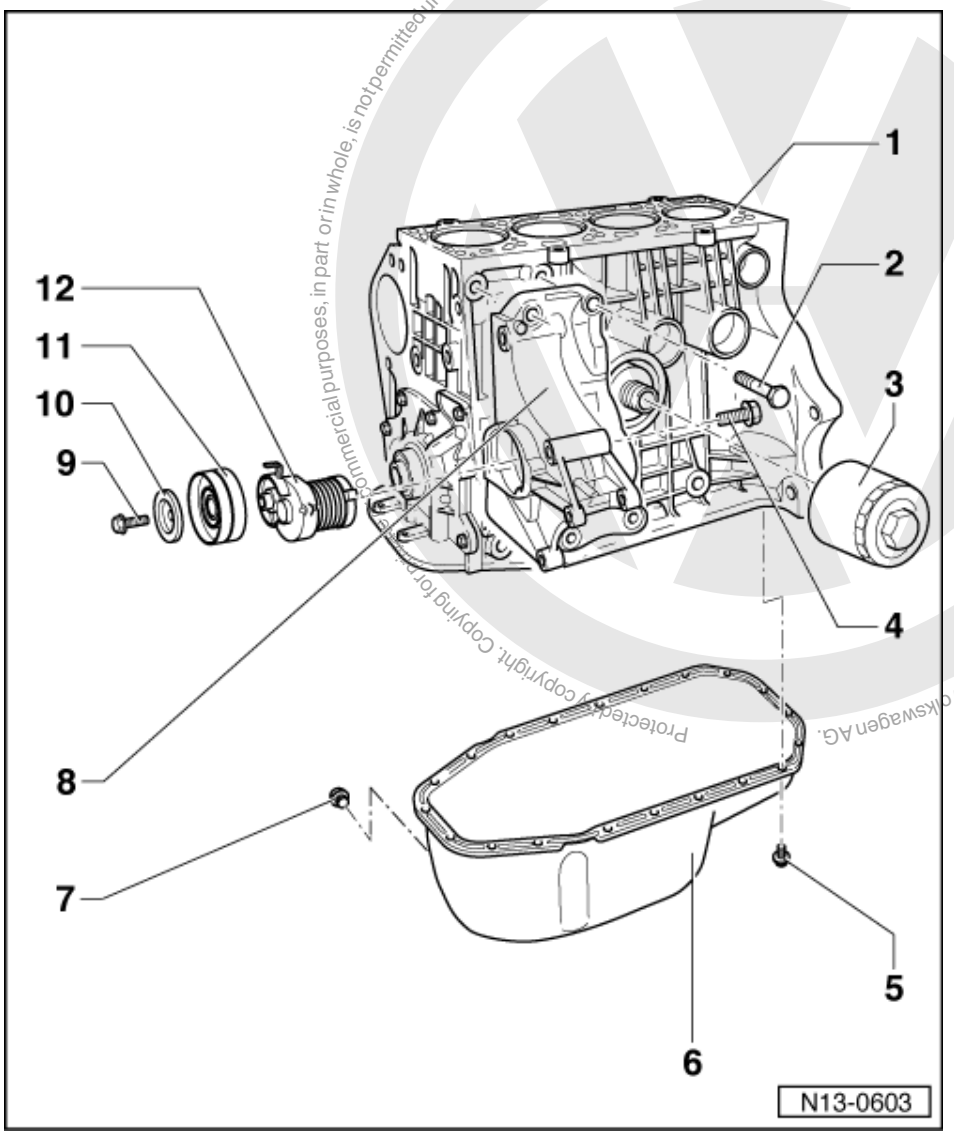

Part II

Note:

Servicing the clutch:

=> Repair group 30; Servicing clutch; Removing and installing clutch Servicing clutch Removing and installing clutch

1 Cylinder block
- Dismantling and assembling aluminium cylinder block => Page 34
- Dismantling and assembling pistons and conrods => Page 49

2 45 Nm
- Renew
- Before turning in, clean thread and coat with locking fluid D 000 600 A2
- Tightening order:

=> Repair group 87; Air conditioner with manual controls; Removing and installing compressor bracket Air conditioner with manual controls Removing and installing compressor bracket

satelettronica

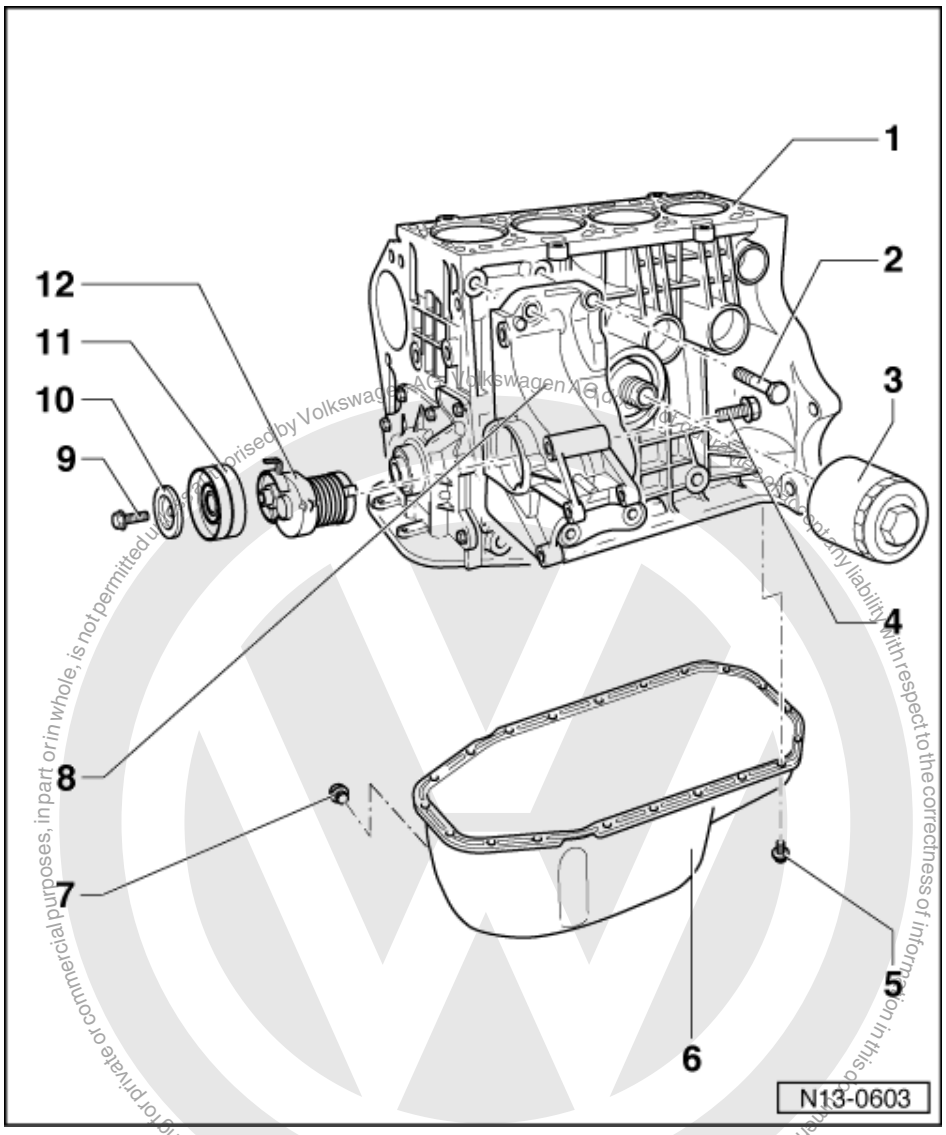

3 Oil filter
- Loosen at hexagon bolt head
- Tighten by hand
- Note instructions on filter when installing

4 M8: 20 Nm + 1/4 turn (90 °) further

5 15 Nm
- Loosen and tighten only bolts on flywheel end with socket insert T10058

6 Sump
- Removing and installing
  => Page 90

7 Oil drain plug, 30 Nm
- With attached seal
- Renew

satelettronica

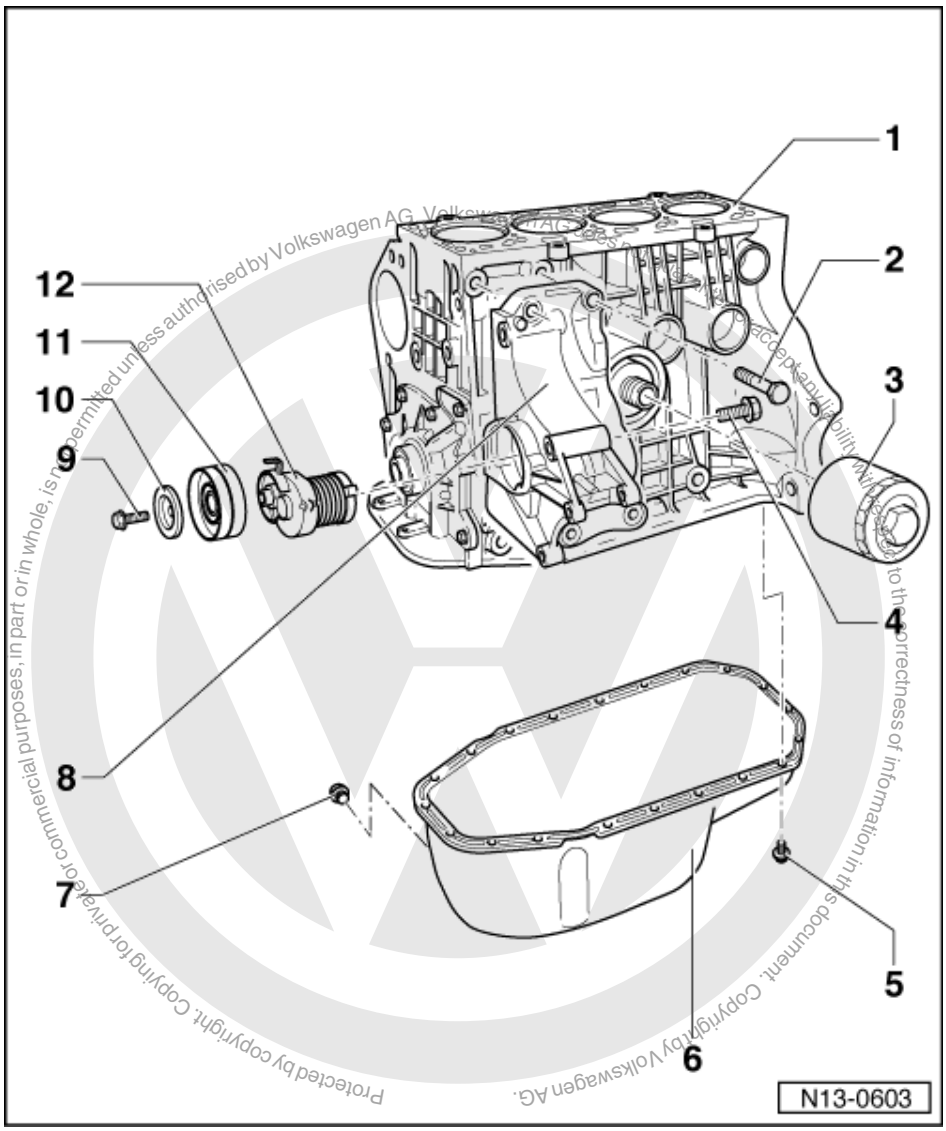

8 Compact bracket
- For vane pump and alternator
- Removing and installing compact bracket on vehicles with air conditioner:

=> Repair group 87; Air conditioner with manual controls; Removing and installing compressor bracket Air conditioner with manual controls Removing and installing compressor bracket

9 45 Nm
10 Washer
11 Tensioning roller
12 Tensioning element

satelettronica

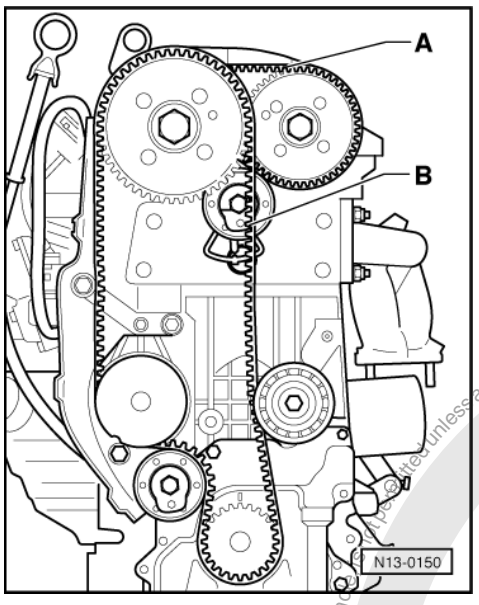

-> Fig. 1 Toothed belt routing

A - Coupling drive toothed belt

B - Main drive toothed belt

1.2 - Removing and installing ribbed belt

Removing

- Remove right insulation tray.
- Mark ribbed belt direction of rotation.

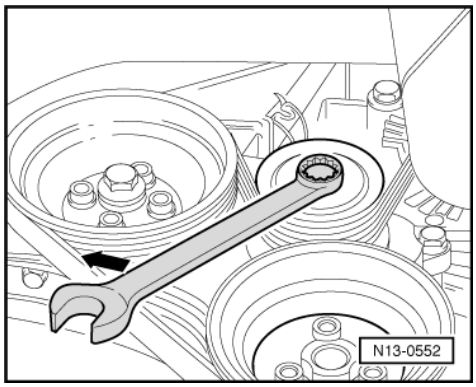

- -> Using a spanner on the securing bolt swivel tensioning roller in direction of arrow.
- Remove ribbed V-belt.

Installing

- Place ribbed V-belt onto crankshaft pulley first. Slide belt onto tensioning roller last.

Protected by copyright. Copying for private or commercial purposes, in part or in whole, is not permitted unless authorised by Volkswagen AG. Volkswagen AG does not guarantee or accept any liability with respect to the correctness of information in this document. Copyright by Volkswagen AG.
satelettronica

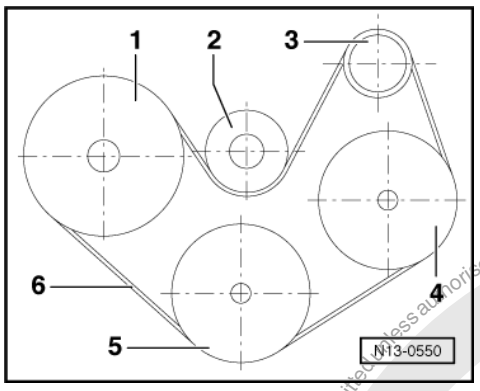

Ribbed belt routing

-> Belt drive with air conditioner compressor

1 - Crankshaft/pulley
2 - Tensioner
3 - Pulley - Alternator
4- Air conditioner compressor
5 - Pulley - P.A.S. vane pump
6 - Ribbed belt

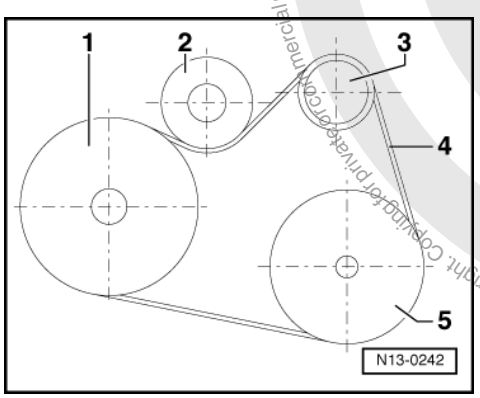

-> Belt drive without air conditioner compressor

1 - Crankshaft/pulley
2 - Tensioner
3 - Pulley - Alternator
4 - Ribbed belt
5 - Pulley - P.A.S. vane pump

Note:

When installing the ribbed V-belt, ensure the belt runs in the right direction and seats correctly on the belt pulleys.

The rest of the assembly is basically a reverse of the dismantling sequence.

1.3 - Checking valve timing

- Remove the toothed belt guard upper part.

Protected by copyright. Copying for private or commercial purposes, in part or in whole, is not permitted unless authorised by Volkswagen AG. Volkswagen AG does not guarantee or accept any liability with respect to the correctness of information in this document. Copyright by Volkswagen AG.
satelettronica

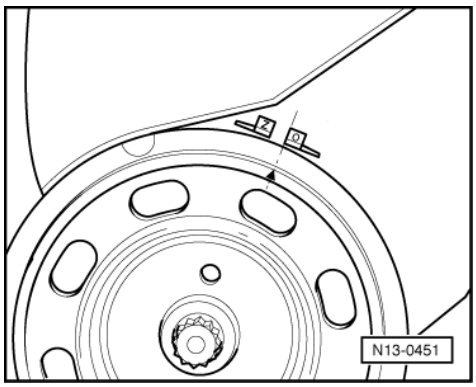

- -> Position the crankshaft to top dead centre No. 1 cylinder. The notch on the pulley must align with the edge of the -O- mark.

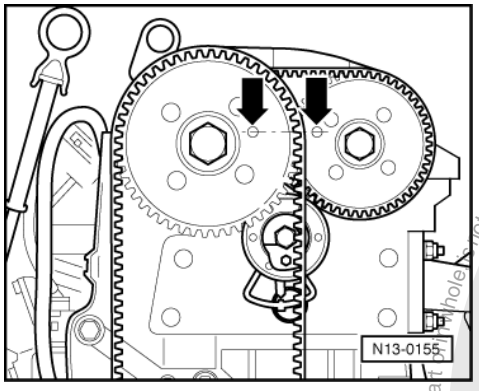

- -> The locking pin holes in the camshaft pulleys must align with the fitting holes in the camshaft housing - arrows-.

Note:

If the locking pin holes are positioned to the outside on the toothed belt pulleys, the crankshaft must be turned one revolution further.

Protected by copyright. Copying for private or commercial purposes, in part or in whole, is not permitted unless authorised by Volkswagen AG. Volkswagen AG does not guarantee or accept any liability with respect to the correctness of information in this document. Copyright by Volkswagen AG.
satelettronica

1.4 - Removing, installing and tensioning toothed belts

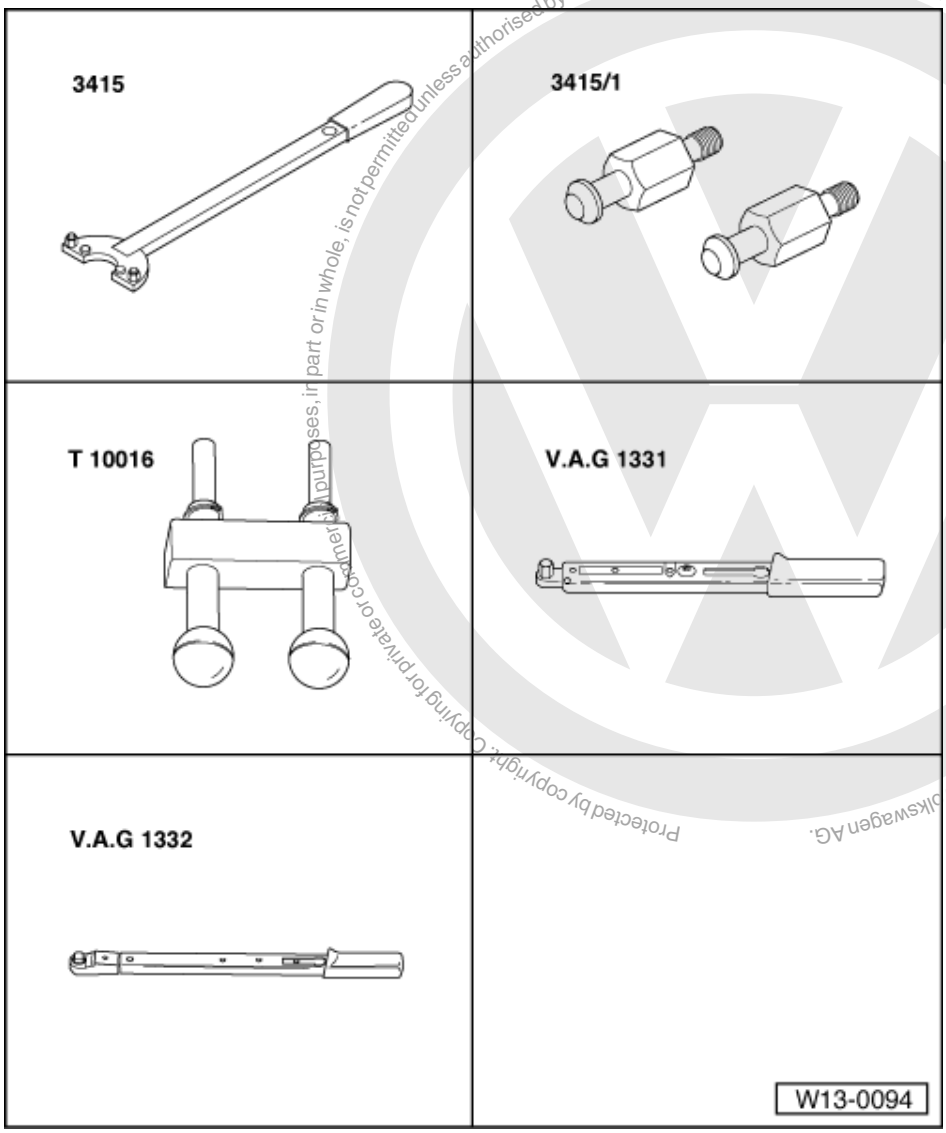

Protected by copyright. Copying for private or commercial purposes, in part or in whole, is not permitted unless authorised by Volkswagen AG. Volkswagen AG does not guarantee or accept any liability with respect to the correctness of information in this document. Copyright by Volkswagen AG.

satelettronica

Special tools, workshop equipment, test and measuring appliances and auxiliary items required

- 3415 Counter support
- 3415/1 Pins
- T 10016 Camshaft locking device
- V.A.G 1331 Torque wrench (5...50 Nm)
- V.A.G 1332 Torque wrench (40...200 Nm)

Removing

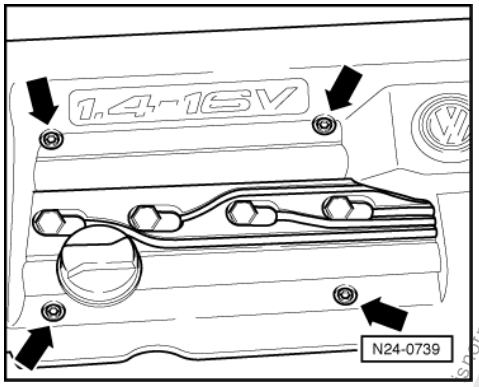

- -> Remove cover above camshaft housing -arrows-.
- Remove air cleaner together with air intake connecting piece:

=> Repair group 24; Servicing injection; Dismantling and assembling air cleaner Servicing injection Dismantling and assembling air cleaner

- Remove the toothed belt guard upper part.

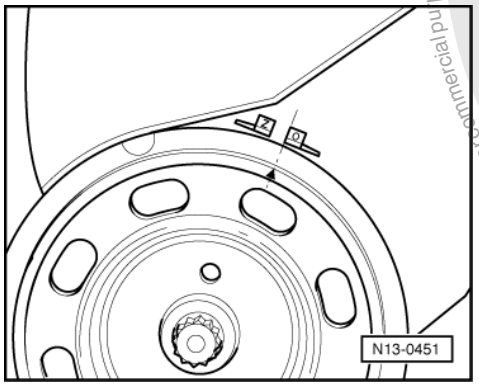

- -> Position the crankshaft to top dead centre No. 1 cylinder. The notch on the pulley must align with the edge of the -O- mark.

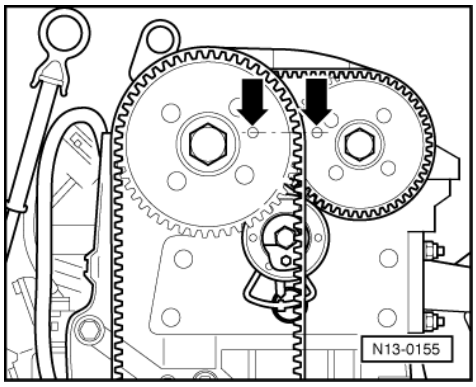

- -> The locking pin holes in the camshaft sprockets must align with the fitting holes in the camshaft housing -arrows-.

Note:

If the locking pin holes are positioned to the outside on the toothed belt sprockets, the crankshaft must be turned one revolution further.

Fix both camshaft sprockets with camshaft locking device T 10016 as follows:

Protected by copyright. Copying for private or commercial purposes, in part or in whole, is not permitted unless authorised by Volkswagen AG. Volkswagen AG does not guarantee or accept any liability with respect to the correctness of information in this document. Copyright by Volkswagen AG.
satelettronica

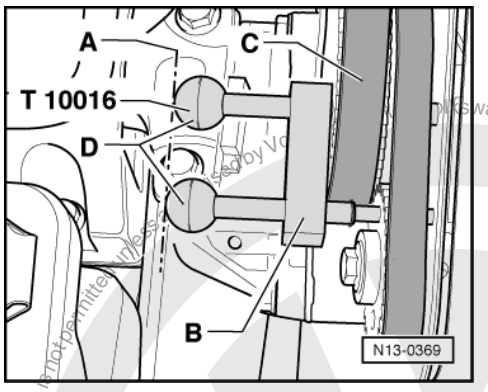

- -> Guide both locking pins through camshaft sprocket locking pin holes onto stop in camshaft housing fitting holes.

Note:

Both locking pins are inserted correctly when the ends -D- align with line -A-.

Slide retainer -B- onto stop on inlet camshaft sprocket -C-.

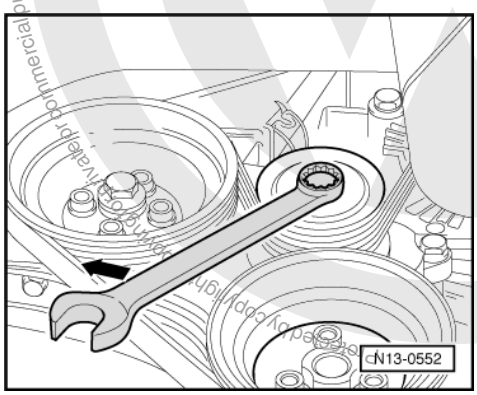

- Remove right insulation tray.
- Mark the direction of rotation of the ribbed belt and remove belt as follows.
- -> Using a spanner on the securing bolt swivel tensioning roller in direction of arrow.
- Remove ribbed belt.

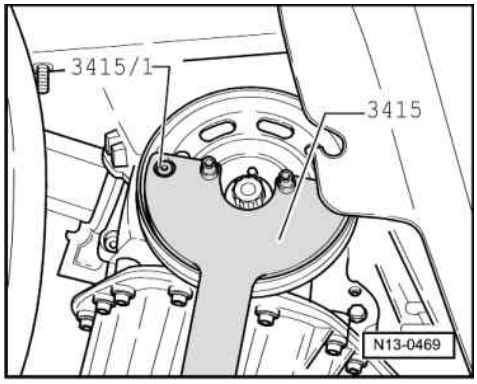

- -> Remove pulley and toothed belt sprocket securing bolt. To do this hold the pulley with counter-hold tool 3415 and 3415/1.
- Remove pulley. Refit securing bolt with two washers and tighten to secure toothed belt sprocket.
- Remove idler roller on vehicles with air conditioning system and ribbed belt tensioning roller.
- Remove lower toothed belt guard.
- Mark direction of rotation of both toothed belts.

Volkswagen AG does not guarantee or accept any liability with respect to the correctness of information in this document. Copyright by Volkswagen AG.
For commercial purposes, part or in whole, is not permitted unless authorized by Volkswagen AG.
satelettronica

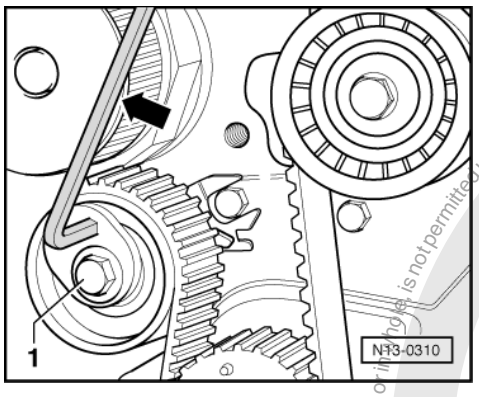

Removing main drive toothed belt:

- -> Release main drive tensioner -1- and slacken toothed belt by turning tensioning roller anti-clockwise arrow-.
- Loosen clamping bolt on tensioning roller.
- Take off toothed belt.

Removing coupling drive toothed belt:

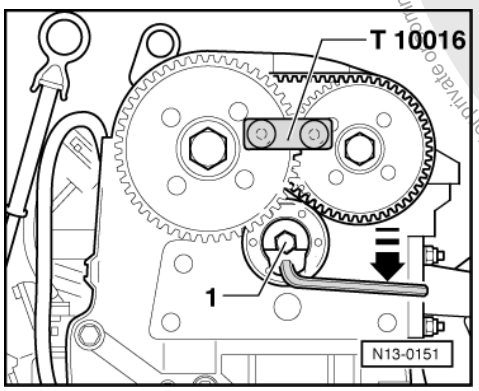

- -> Loosen coupling drive tensioner -1- and slacken toothed belt by turning tensioning roller clockwise.
- Remove coupling drive tensioning roller.
- Take off toothed belt.

Installing

Prerequisites

- The pistons must not be positioned at TDC.
- The crankshaft toothed belt sprocket is secured to the crankshaft with the securing bolt and two washers.
- Camshaft sprockets arrested in camshaft housing fitting holes with T 10 016 and secured against turning.

Note:

If a piston is at TDC the valves could strike the piston when turning the camshafts.

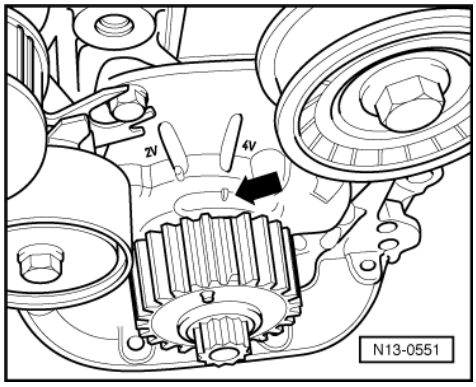

Protected by copyright. Copying for private or commercial purposes, in part or in toto, is not permitted unless authorised by Volkswagen AG. Volkswagen AG does not guarantee or accept any liability with respect to the correctness of information in this document. Copyright by Volkswagen AG.
satelettronica

Work sequence

- -> Set the crankshaft to TDC No. 1 cylinder. The tooth with end ground down must align with the mark on the oil pump -arrow-.
- Fit toothed belt for coupling the camshafts in a clockwise direction starting at top on inlet camshaft sprocket and then onto exhaust camshaft sprocket. The slack section of the toothed belt must be downwards. Note direction of rotation with used belts.

Install coupling drive tensioning roller as follows:

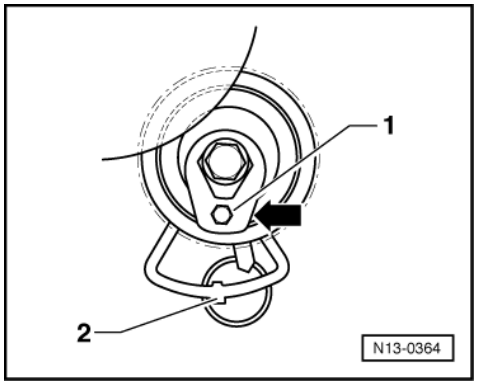

- -> Turn coupling drive tensioning roller clockwise towards marking window -arrow- using a hexagon key -1- (tensioning roller in untensioned position).
- Press lower section of toothed belt for coupling the camshafts upwards with tensioning roller and fit tensioning roller securing bolt.

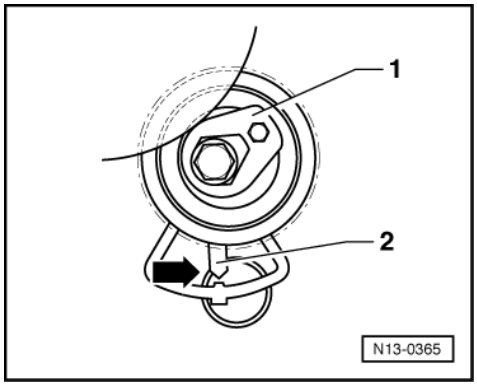

- Tighten securing bolt hand tight. The lug in the base plate must engage in the hole in the cylinder head -2-.
- -> Then tension toothed belt by turning tensioning roller anti-clockwise, with a hexagon key item -1-, until the indicator -2- aligns over the lug in the base plate in the marking window -arrow-.
- Tighten clamping nut on tensioning roller.
  Tightening torque: 20 Nm

Note:

The tool must secure camshaft against turning until the main drive toothed belt is fitted.

- Fit main drive toothed belt on in anti-clockwise direction starting at water pump then via tensioning roller, crankshaft, idler roller and inlet camshaft sprocket. Note direction of rotation with used belts.

Protected by copyright. Copying for private or commercial purposes, in part or in whole, is not permitted unless authorised by Volkswagen AG. Volkswagen AG does not guarantee or accept any liability with respect to the correctness of information in this document. Copyright by Volkswagen AG.
satelettronica

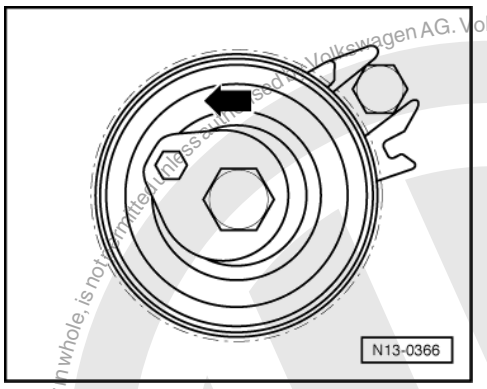

If tensioning roller was removed beforehand, install tensioning roller as follows:

- -> Using Allen key turn main drive tensioning roller anti-clockwise to position shown -arrow-.

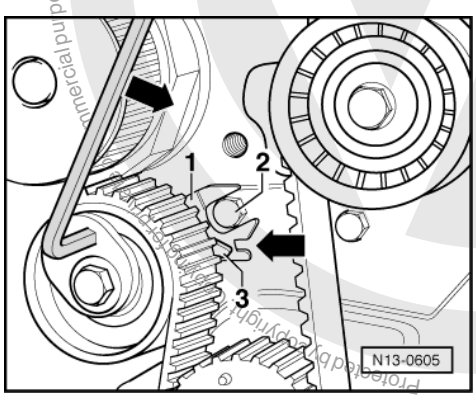

- -> Tighten securing bolt hand tight. The base plate -1- cut-out must engage over securing bolt -2-.
- Loosen securing bolt on used tensioning roller.
- Then tension toothed belt by turning the tensioning roller in direction of arrow until the indicator -3- aligns with the groove in the base plate -arrow-.
- Remove tool from camshaft sprockets.
- Tighten clamping nut on tensioning roller.
  Tightening torque: 20 Nm

- Now turn the crankshaft two turns in engine direction of rotation until it is again at top dead centre No. 1 cylinder.
- Now the position of the toothed belts and tensioning roller must be checked again.
- Tension toothed belt again if necessary.
- Refit toothed belt guard.
- Refit crankshaft belt pulley. When doing this note the following:
  - The securing bolt for the pulley and toothed belt sprocket must be renewed.
  - When installing the pulley observe the fixing arrangement to toothed belt sprocket.
  - Tightening procedure for the new oiled bolt: 90 Nm + 1/4 turn (90°) further.

- Install ribbed belt again.

Note:

When installing the ribbed belt ensure that it sits correctly in the pulleys.

- Install air cleaner:

=> Repair group 24; Servicing injection system; Dismantling and assembling air cleaner. Servicing injection system Dismantling and assembling air cleaner.

- Interrogate fault memory:

satelettronica

=> Repair group 01; Fault memory; Interrogating and erasing fault memory of engine control unit Fault memory Interrogating and erasing fault memory of engine control unit

1.5 - Checking semi-automatic toothed belt tensioning roller

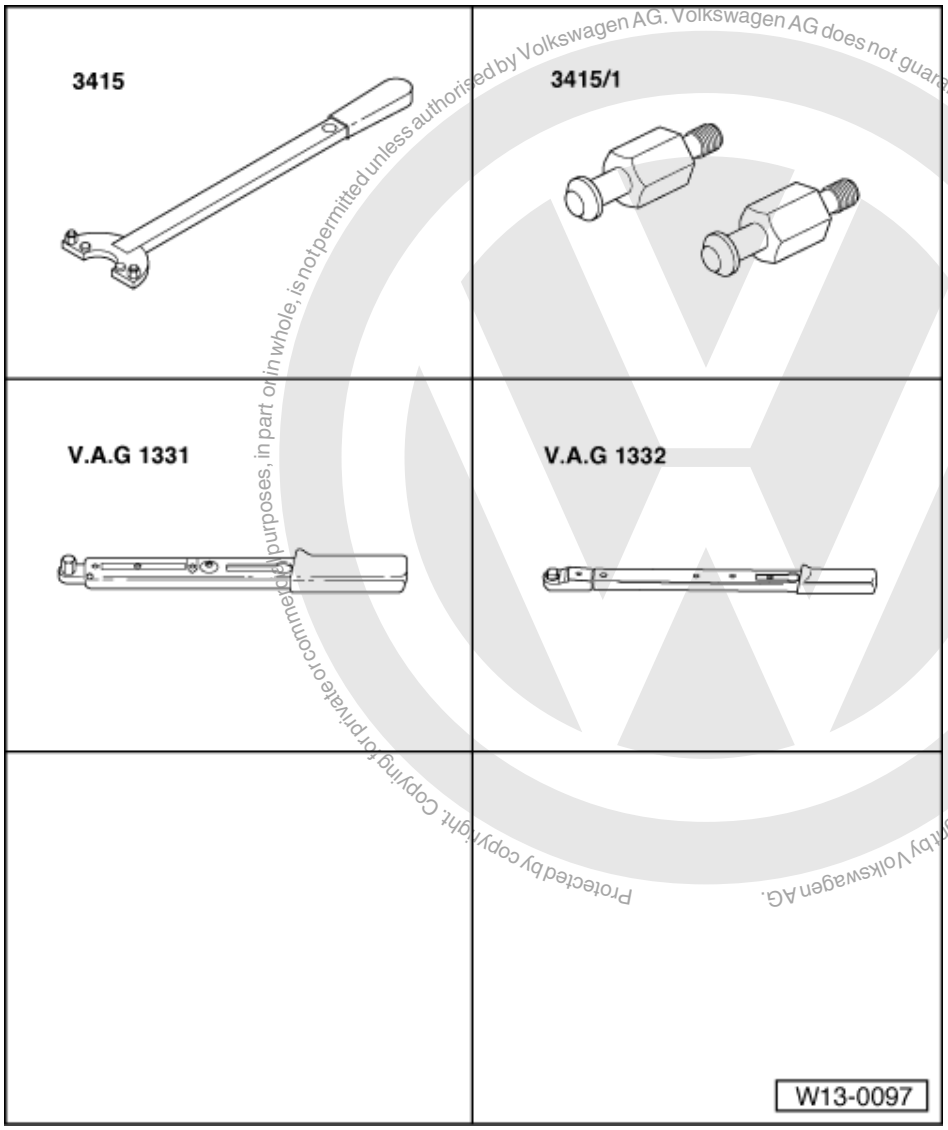

Protected by copyright. Copying for private or commercial purposes, in part or in whole, is not permitted unless authorised by Volkswagen AG. Volkswagen AG does not guarantee or accept any liability with respect to the correctness of information in this document. Copyright by Volkswagen AG.

satelettronica

Special tools, workshop equipment, test and measuring appliances and auxiliary items required

- 3415 Counter support
- 3415/1 Bolts
- V.A.G 1331 Torque wrench (5...50 Nm)
- V.A.G 1332 Torque wrench (40...200 Nm)

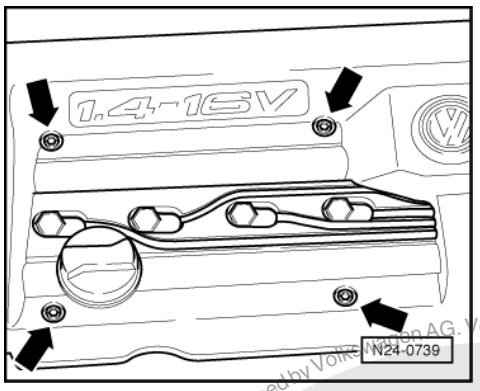

Checking main drive tensioning roller:

Checking coupling drive tensioning roller =>Page 32 .

Test sequence

- -> Remove cover above camshaft housing -arrows-.
- Remove air cleaner together with air intake connecting piece:

=> Repair group 24; Servicing injection; Dismantling and assembling air cleaner Servicing injection Dismantling and assembling air cleaner

- Remove the toothed belt guard upper part.
- Remove right insulation tray.
- Mark ribbed belt direction of rotation.

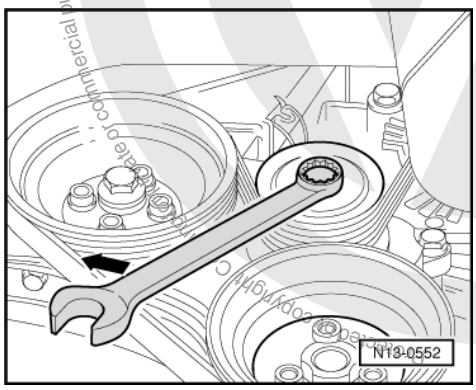

- -> Using a spanner on the securing bolt swivel tensioning roller in direction of arrow.
- Remove ribbed belt.

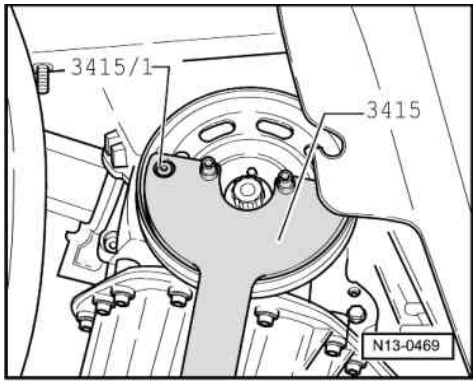

- -> Remove pulley and toothed belt sprocket securing bolt. To do this hold the pulley with counter-hold tool 3415 and 3415/1.
- Remove pulley. Refit securing bolt with two washers and tighten to secure toothed belt sprocket.

Copyright by Volkswagen AG. Volkswagen AG does not guarantee or accept any liability with respect to the correctness of information in this document. Copyright by Volkswagen AG. For commercial purposes, only if authorised by Volkswagen AG, to be made available to parties who are not permitted to have access to this data.
satelettronica

- Now turn the crankshaft two turns in engine direction of rotation until it is again at top dead centre No. 1 cylinder.

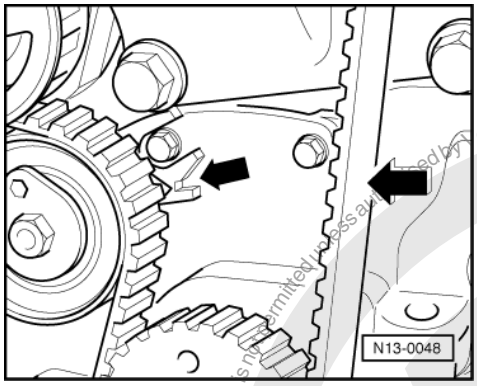

- -> Note the position of the tensioning roller indicator -arrow-. Press the toothed belt with firm thumb pressure. The indicator must move.
- Release tension on toothed belt.
- Turn crankshaft two turns in engine direction of rotation.
- Then check the position of the indicator. It must have returned to its original position.

If tensioning roller does not return to initial position:

- Replace tensioning roller.

Checking coupling drive tensioning roller:

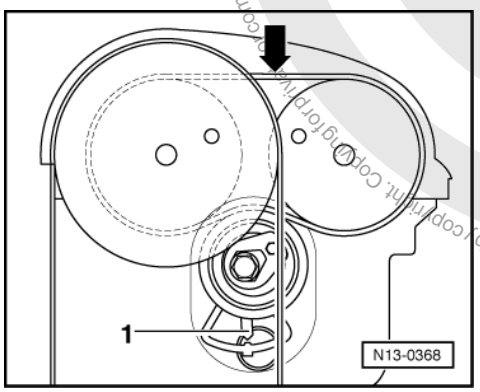

- -> Note the position of the tensioning roller indicator -1-. Press the toothed belt with firm thumb pressure -arrow-. The indicator must move.
- Release tension on toothed belt.
- Turn crankshaft two turns in engine direction of rotation.
- Then check the position of the indicator. It must have returned to its original position.

If tensioning roller does not return to initial position:

- Replace tensioning roller.

If both tensioning rollers are OK:

- Refit toothed belt guard.
- Refit crankshaft belt pulley. When doing this note the following:
  - The pulley and toothed belt sprocket securing bolt must be renewed.
  - When installing the pulley observe the fixing arrangement to toothed belt sprocket.
  - Tightening procedure for the new oiled bolt: 90 Nm + 1/4 turn (90°) further.
- Refit the ribbed belt.

Protected by copyright. Copying for private or commercial purposes, in part or in whole, is not permitted unless authorised by Volkswagen AG. Volkswagen AG does not guarantee or accept any liability with respect to the correctness of information in this document. Copyright by Volkswagen AG.
satelettronica

Note:

When installing the ribbed belt ensure that it sits correctly in the pulleys.

- Install air cleaner:

=> Repair group 24; Servicing injection system; Dismantling and assembling air cleaner. Servicing injection system Dismantling and assembling air cleaner.

2 - Removing and installing cylinder block, sealing flange and flywheel

2.1 - Removing and installing cylinder block, sealing flange and flywheel

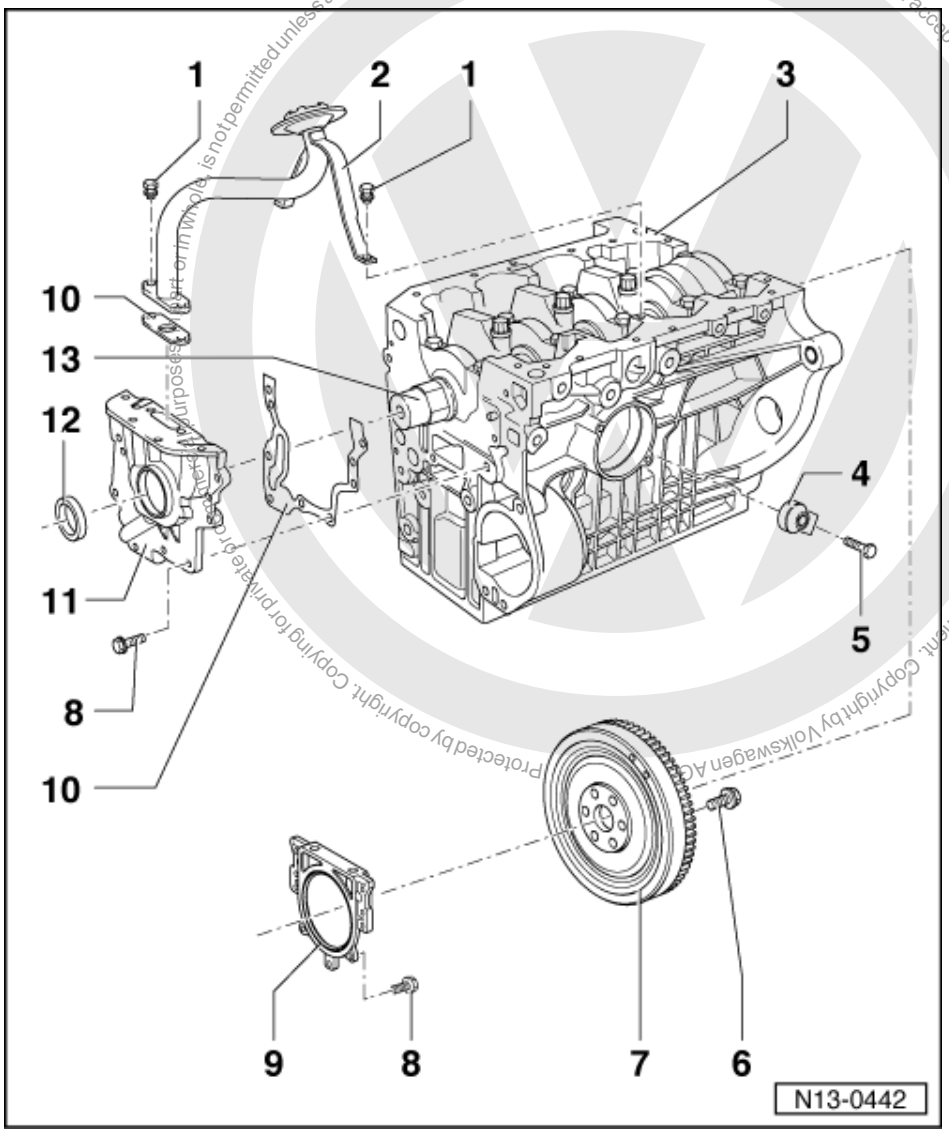

satelettronica

Copyright by Volkswagen AG. Volkswagen AG does not guarantee or accept any liability with respect to the correctness of information in this document. Copying for private or commercial purposes, in part or in whole, is not permitted unless authorised by Volkswagen AG.

2.2 - Aluminium cylinder block

Warning!
The crankshaft must not be removed. Just loosening the main bearing caps will cause deformation of the cylinder block bearing pedestals. This deformation will cause a reduction of the bearing clearance. Even if the bearing shells are not renewed bearing damage could occur due to a different bearing clearance.
If the bearing cap bolts are loosened, the cylinder block must be replaced complete with the crankshaft.
Measuring the main bearing clearance is not possible with normal workshop equipment.

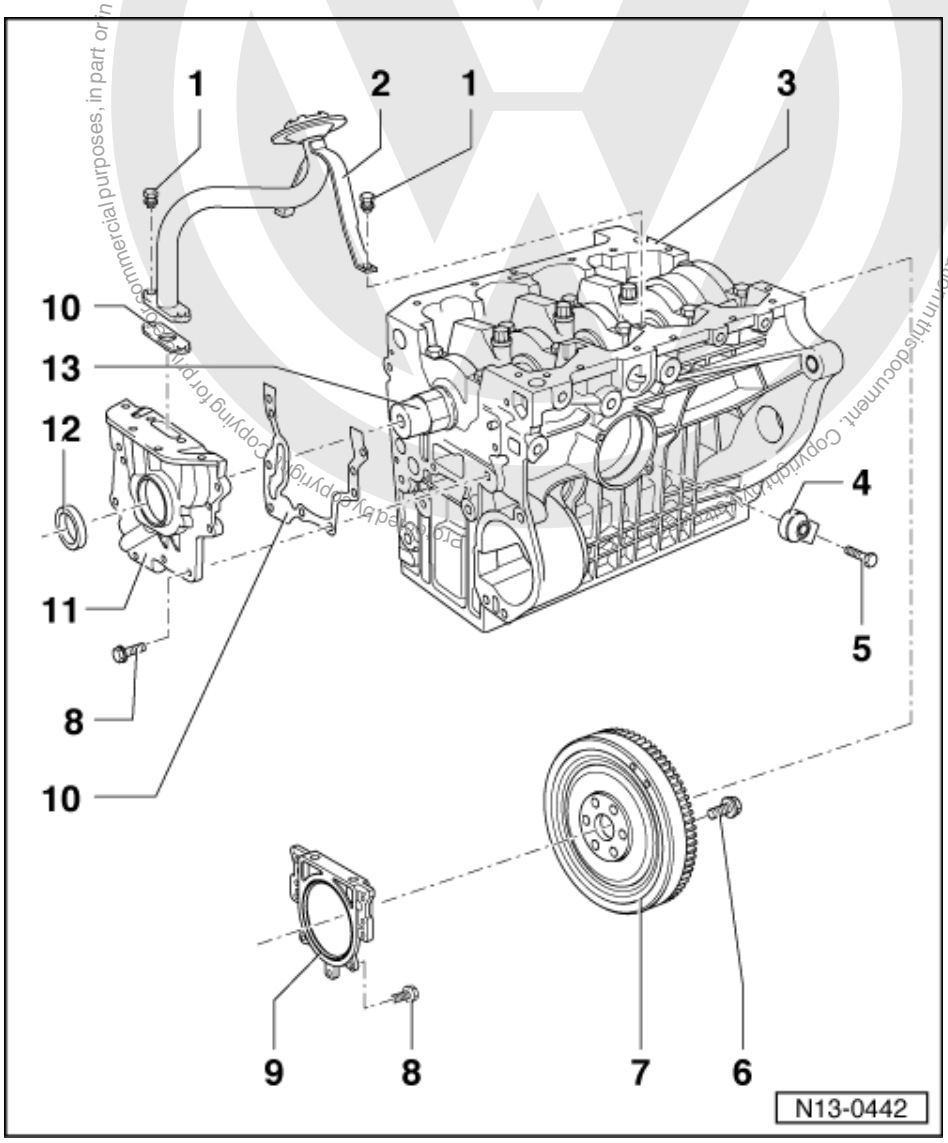

Note:

For repairs to the clutch:

=> Repair group 30; Servicing clutch; Removing and installing clutch Servicing clutch Removing and installing clutch

1 10 Nm
2 Suction pipe
3 Aluminium cylinder block

satelettronica

4 Knock sensor
5 20 Nm
- Tightening torque influences the function of the knock sensor

6 60 Nm + 1/4 turn (90 °) further
- Renew

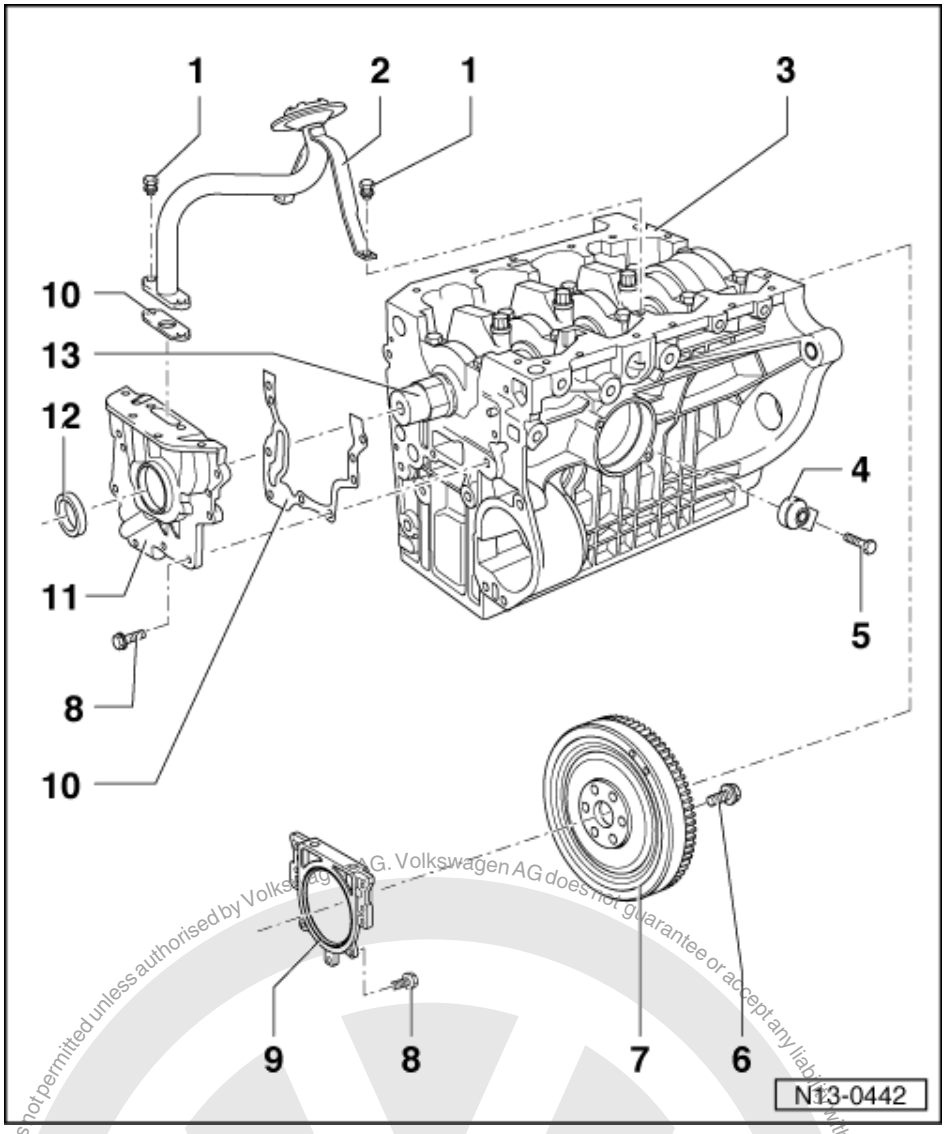

7 Flywheel
- To remove and install flywheel counter-hold with 3067

8 12 Nm
- Renew

9 Sealing flange with sender wheel and oil seal
- Only renew complete with oil seal and sender wheel
- Removing and installing sealing flange =>Page 39 , Renewing crankshaft sealing flange -flywheel end-

10 Gasket
- Renew

Protected by copyright. Copying for private or commercial purposes, in part or in whole, is not permitted unless authorised by Volkswagen AG. Volkswagen AG does not guarantee or accept any liability with respect to the correctness of information in this document. Copyright by Volkswagen AG.
satelettronica

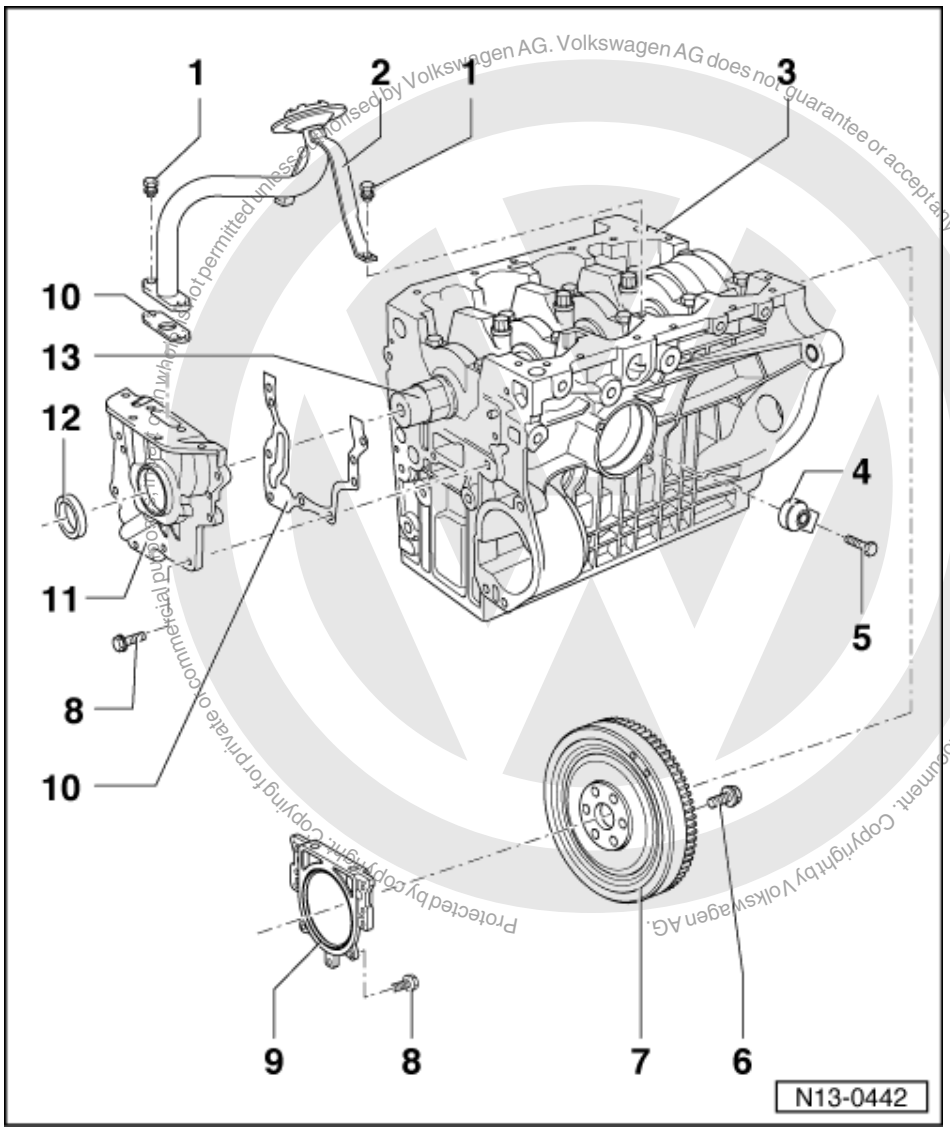

Protected by copyright. Copying for private or commercial purposes, in part or in whole, is not permitted unless authorised by Volkswagen AG. Volkswagen AG does not guarantee or accept any liability with respect to the correctness of information in this document. Copyright by Volkswagen AG.

satelettronica

11 Oil pump
- Only renew complete
- When installing note follower -item 13 - on crankshaft
- Must be located on dowel sleeves
- Removing and installing oil pump => Page 92

12 Oil seal
- Renewing => Page 37

13 Follower
- Coat with oil before installing oil pump

2.3 - Renewing crankshaft oil seal -belt pulley end-

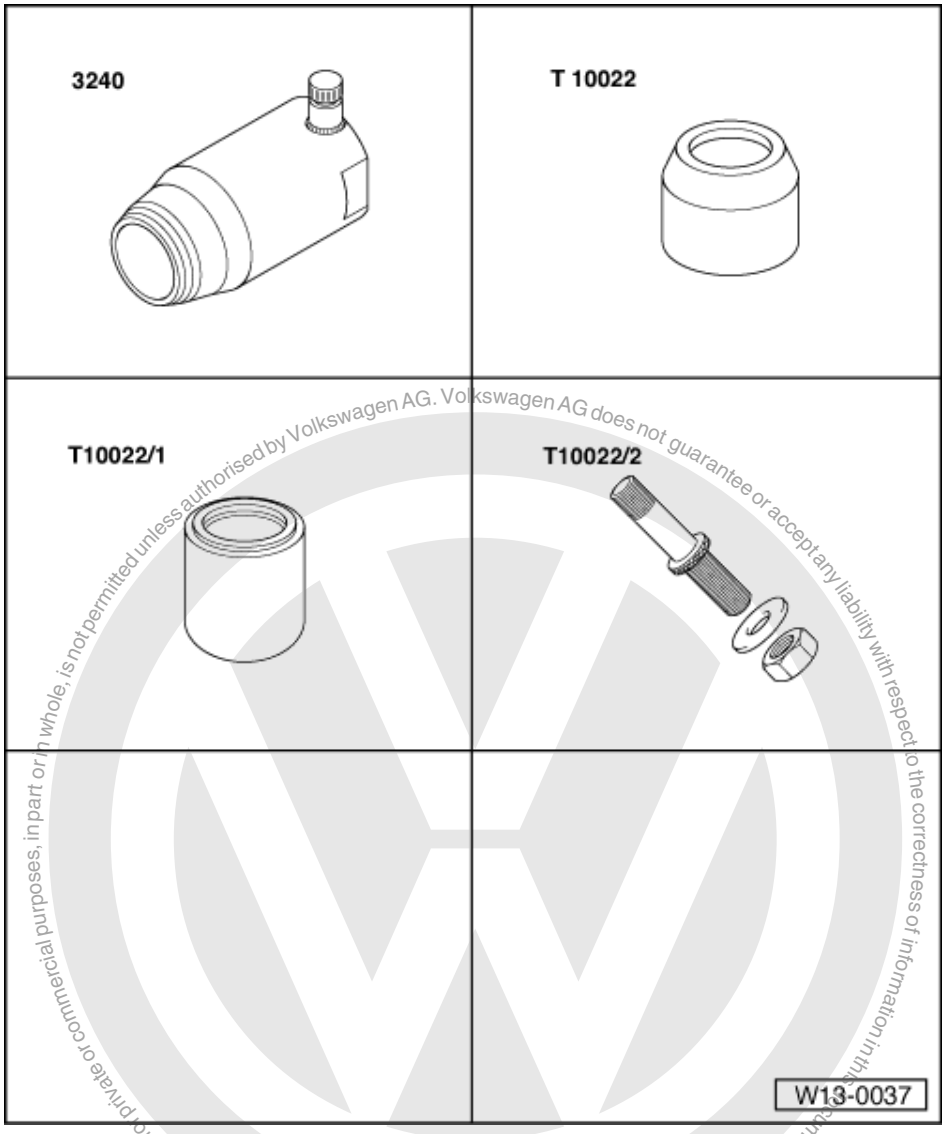

Protected by copyright. Copying for private or commercial purposes, in part or in whole, is not permitted unless authorised by Volkswagen AG. Volkswagen AG does not guarantee or accept any liability with respect to the correctness of information in this document. Copyright by Volkswagen AG.

satelettronica

Special tools, workshop equipment, test and measuring appliances and auxiliary items required

- 3240 Oil seal extractor
- T10022 Sleeve
- T10022/1 Press piece
- T10022/2 Spindle

Removing

- First remove main drive toothed belt
  => Page 24 .
- Then remove the crankshaft toothed belt sprocket.
- To guide oil seal extractor screw crankshaft sprocket securing bolt into crankshaft onto stop.

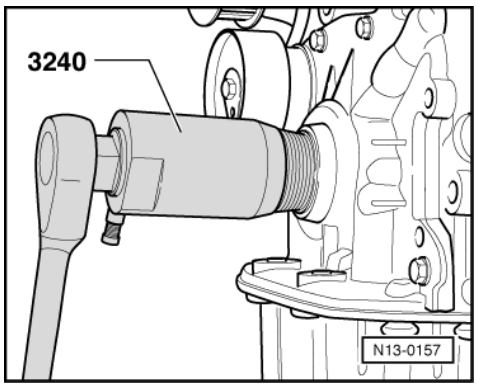

- Unscrew inner part of oil seal extractor 3240 two turns (approx. 3 mm) out of the outer part and lock with knurled screw.
- -> Lubricate threaded head of oil seal extractor 3240, place it in position and exerting firm pressure screw it as far as possible into oil seal.
- Loosen knurled screw and turn inner part against crankshaft until the oil seal is pulled out.

Installing

- Lightly oil sealing lip of new oil seal.

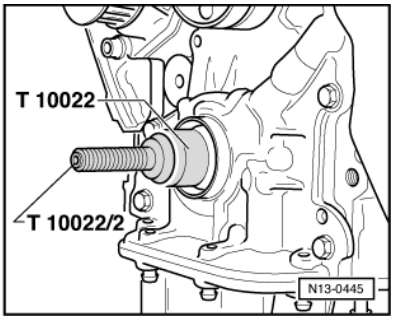

- -> Fit sleeve T10022 onto crankshaft journal and turn spindle T10022/2 in onto stop.
- Slide oil seal over guide sleeve.

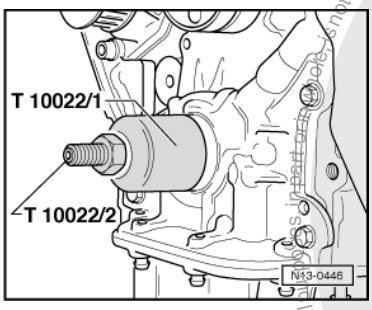

- -> Press in oil seal onto stop with press piece T10022/1.
- Install main drive toothed belt => Page 24 .

Protected by copyright. Copying for private or commercial purposes, in part or in whole, is not permitted unless authorised by Volkswagen AG. Volkswagen AG does not guarantee or accept any liability with respect to the correctness of information in this document. Copyright by Volkswagen AG.
satelettronica

2.4 - Renewing crankshaft sealing flange -flywheel end-

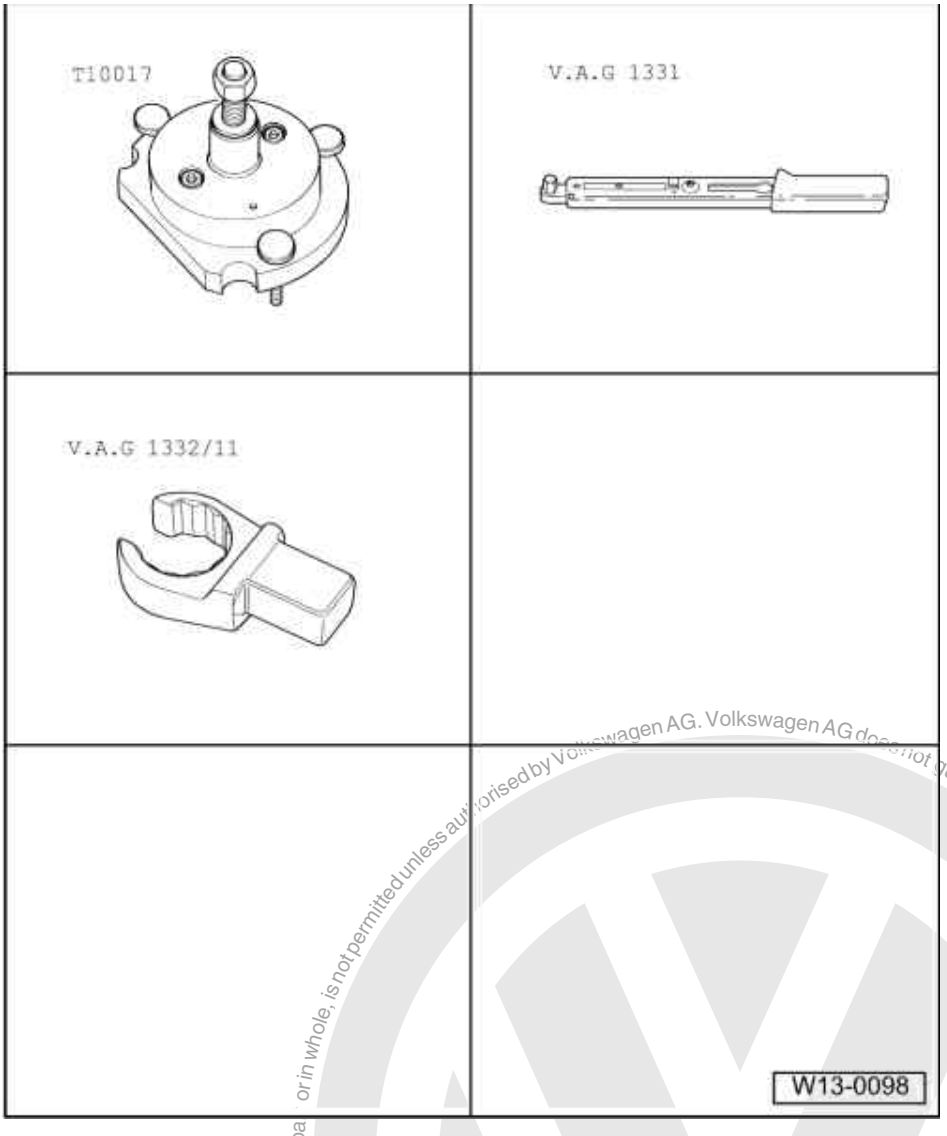

Special tools, workshop equipment, test and measuring appliances and auxiliary items required

- T10017 Assembly device
- V.A.G 1331 Torque wrench (5...50 Nm)
- V.A.G 1332/11 Open ring spanner
- Hexagon bolts (Qty. 3)
  M6 x 35 mm
- Feeler gauge
- Vernier gauge

Pressing sealing flange with sender wheel off crankshaft

Notes:

- To show the work sequence more clearly, the sequence is described for a removed engine.
- The work sequence is the same when the engine is in the vehicle and the gearbox removed.

Work sequence

- Remove the flywheel/drive plate.

satelettronica

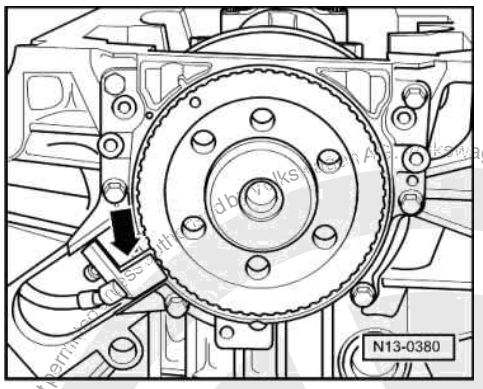

- Set engine to TDC No. 1 cylinder =>Page 22 , Checking valve timing.
- Remove oil sump =>Page 90 .
  -> Remove engine speed sender -arrow-.
  Undo sealing flange securing bolts.

Note:

Sealing flange and sender wheel are pressed off the crankshaft together with Qty. 3 M6 x 35 mm bolts.

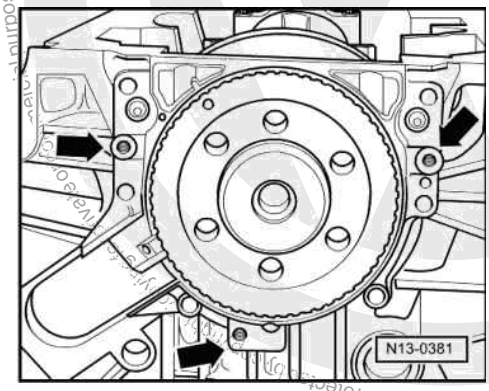

- -> Screw Qty. 3 M6 x 35 mm bolts into the threaded holes -arrows- of the sealing flange.
- Screw the bolts alternately (a 1/2 turn(180°) for each bolt) into the sealing flange and press the sealing flange along with the sender wheel off the crankshaft.

Pressing sealing flange with sender wheel onto crankshaft

Notes:

- Gradual introduction of a new generation of sealing flanges with PTFE seal (Teflon). The sealing flange with spring ring will continue to be offered as spare part.
  When fitting a new sealing flange, be careful to use the same type of sealing flange that was previously fitted.
- The sealing flange with a PTFE sealing ring is equipped with a sealing lip support ring. This support ring serves the function of a fitting sleeve and may not be removed prior to installation.
- Sealing flange and sender wheel must not be separated or twisted after removal from packaging.
- The sender wheel of a sealing flange with spring ring has an Elastomer coating on the sealing surface to crankshaft. This coating must never come into contact with dirt or grease.

- The sender wheel is held in its installation position by a fixture on the assembly device T10017 locating pin.
- Sealing flange and seal are one unit and must be replaced together with the sender wheel only.

satelettronica

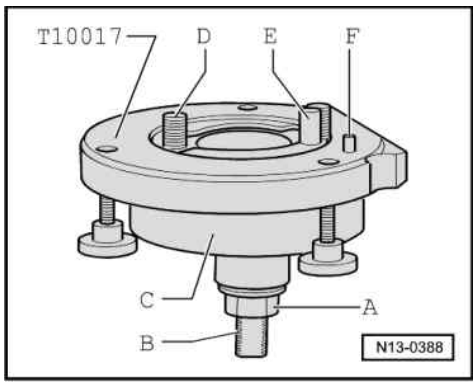

- The assembly appliance T10017 maintains its installation position to the crankshaft via a guide pin which is inserted into a threaded hole in the pressure plate/drive plate.

-> A - Hexagon nut

B - Clamping surface (ground section of spindle)

C - Tool bell housing

D - Socket head bolt

E - Guide pin

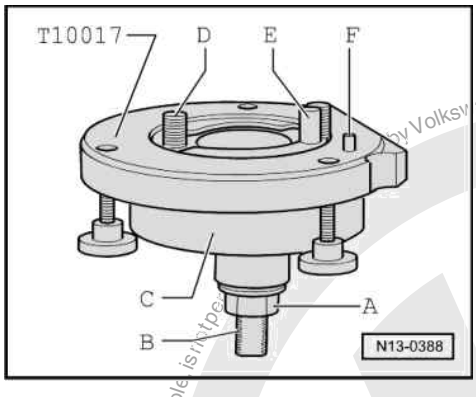

F - Locating pin

A-Assembling sealing flange with sender wheel on assembly appliance T10017

- -> Screw hexagon nut -A- to shortly before the clamping surface (ground section) -B- on the threaded spindle.

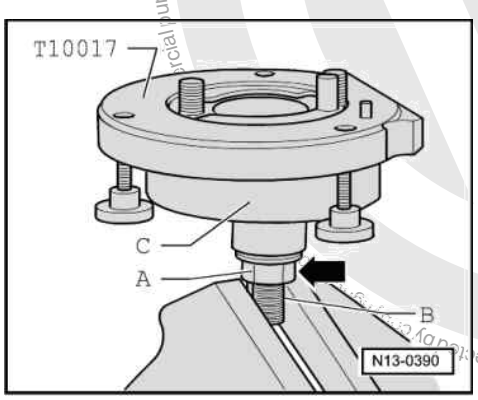

- -> Clamp assembly appliance T10017 in a vice on clamping surface (ground section) on threaded spindle.

Protected by copyright. Copyright by Volkswagen AG. Volkswagen AG does not guarantee or accept any liability with respect to the correctness of information in this document. Copyright by Volkswagen AG.
satelettronica

- Press assembly bell housing -C- downwards so that it lies on the hexagon nut -A- -arrow-.

Note:

Inner part of assembly appliance and assembly bell housing must be at same height (level).

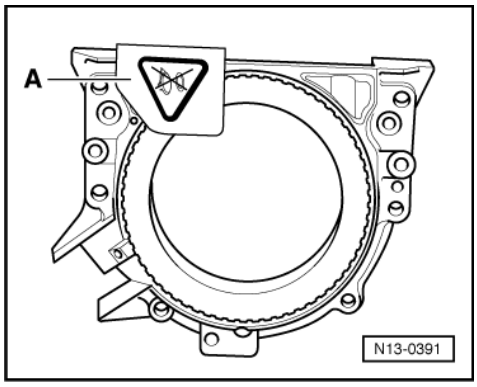

- -> Remove securing clip -A- on new sealing flange.

Note:

The sender wheel must not be taken out of the sealing flange or twisted.

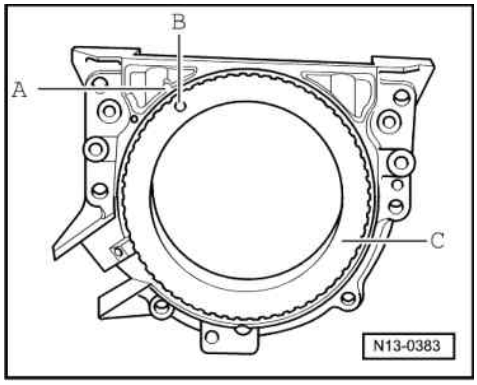

-> The locating hole -B- on the sender wheel -C- must align with the marking -A- on the sealing flange.

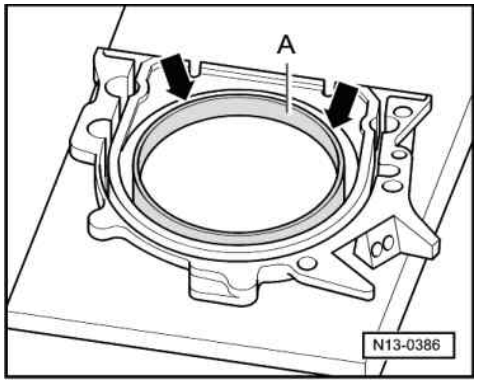

- -> Place the sealing flange (with the forward side downwards) on a clean flat surface.
- Push the sender wheel (sealing lip support ring for PTFE sealing ring) -A- downwards in direction of arrow until it lies on the flat surface.

Protected by copyright. Copying for private or commercial purposes, in part or in whole, is not permitted unless authorised by Volkswagen AG. Volkswagen AG does not guarantee or accept any liability with respect to the correctness of information in this document. Copyright by Volkswagen AG.
satelettronica

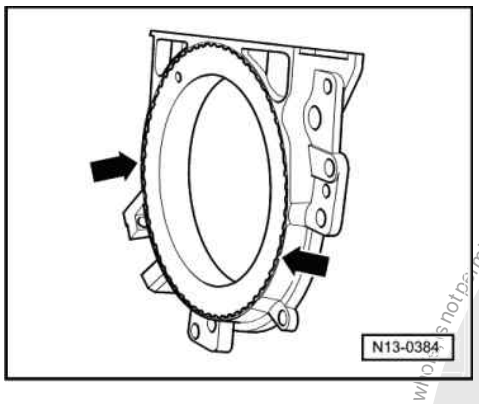

-> The upper edge of the sender wheel and the forward edge of the sealing flange must align -arrows-.

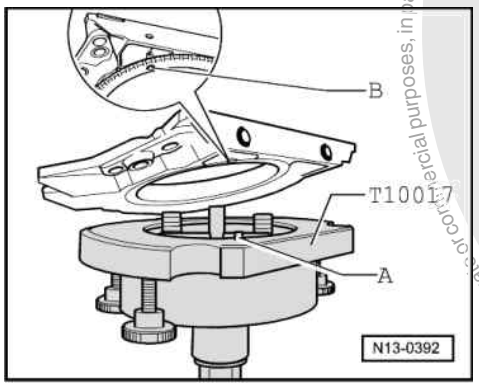

- -> Place the sealing flange, with the forward side on the assembly appliance T10017, so that the locating pin -A- can be inserted in the sender wheel hole -B-.

Note:

Ensure the sealing flange lies flat on the assembly appliance.

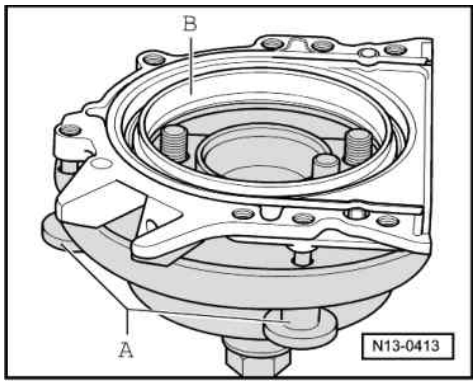

- -> Push the sender wheel -B- (Sealing lip support ring for PTFE sealing ring) onto the surface of the assembly appliance whilst tightening the three knurled screws -A-, so that the locating pin cannot slide out of sender wheel hole.

Note:

Ensure the sender wheel remains fixed on the assembly appliance when installing the sealing flange.

Protected by copyright. Copying for private or commercial purposes, in part or in whole, is not permitted unless authorised by Volkswagen AG. Volkswagen AG does not guarantee or accept any liability with respect to the correctness of information in this document. Copyright by Volkswagen AG.
satelettronica

B-Assembling appliance T10017 with sealing flange on crankshaft flange

Prerequisites

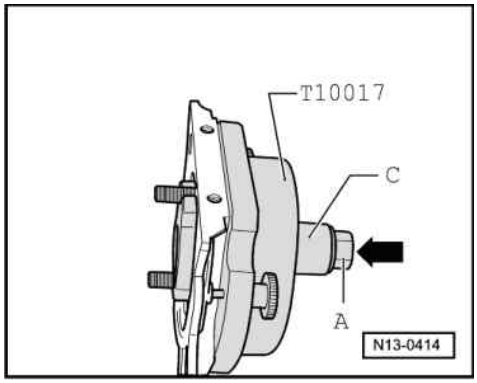

- Crankshaft flange must be free of oil and grease.
- Engine positioned at TDC No. 1 cylinder.

Work sequence

- -> Unscrew hexagon nut -A- to end of threaded spindle.
- Press assembly appliance threaded spindle in direction of arrow, until the hexagon nut -A- lies against the assembly bell housing -C-.

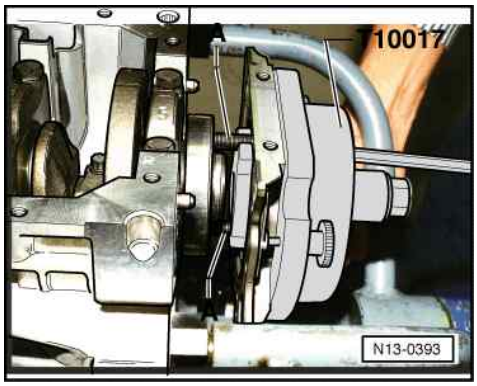

- Align flat side of assembly bell housing towards oil sump side of crankcase sealing surface.
- -> Secure assembly appliance to crankshaft flange with hexagon socket head bolts -A-

Note:

Screw hexagon socket head bolts -A- into crankshaft flange (approx. 5 threads).

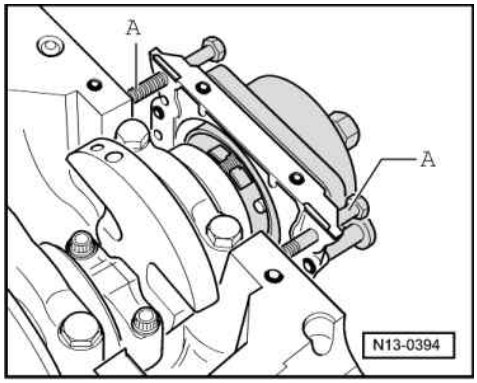

- -> Screw two M6 x 35 mm bolts -A- into cylinder block to guide sealing flange.

Protected by copyright. Copying for private or commercial purposes, in part or whole, is not permitted unless authorised by Volkswagen AG. Volkswagen AG does not guarantee or accept any liability with respect to the correctness of information in this document. Copyright by Volkswagen AG.
satelettronica

C-Fitting assembly appliance T10017 onto crankshaft flange

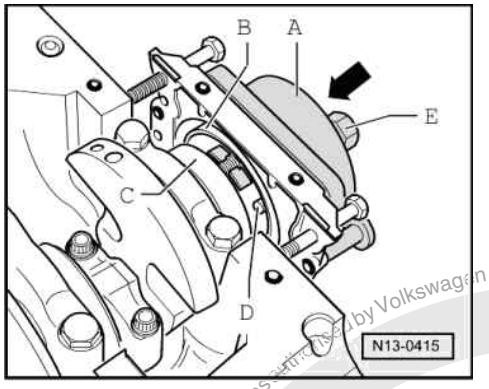

- -> Slide assembly bell housing -A- in direction of arrow by hand until the sender wheel - B- (Sealing lip support ring for PTFE sealing ring) lies against the crankshaft flange -C-.

Note:

The assembly appliance guide pin -D- is guided into threaded hole in crankshaft during the fitting sequence. This ensures the sender wheel reaches its final installation position.

- Hold assembly bell housing in this position and screw both assembly appliance hexagon socket head bolts hand tight.
- Screw hexagon nut -E- onto threaded spindle by hand until it lies against the assembly bell housing -A-.

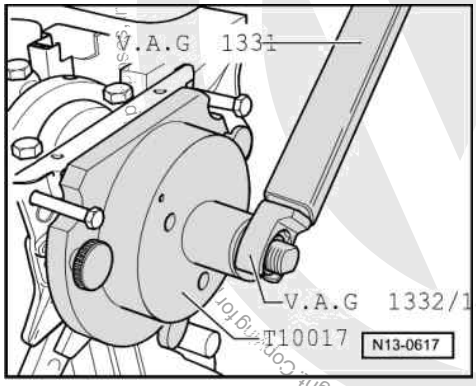

D-Pressing sender wheel onto crankshaft flange with assembly appliance T10017

- -> Tighten assembly appliance hexagon nut with torque wrench V.A.G 1331 and open ring spanner insert V.A.G 1332/11.
  Tightening torque: 35 Nm

Note:

A small air gap must be present between cylinder block and sealing flange after tightening hexagon nut to 35 Nm.

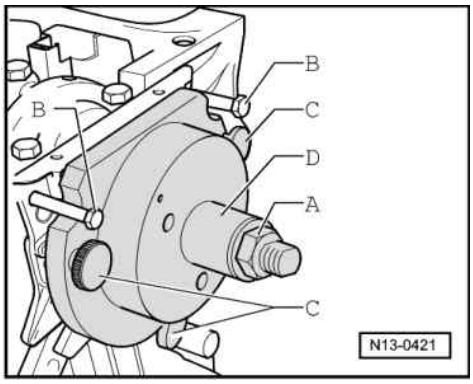

satelettronica

E-Checking sender wheel installation position on crankshaft

- -> Screw hexagon nut -A- to end of threaded spindle.
- Remove the two M6 x 35 mm hexagon bolts -B- from cylinder block.
- Screw the three thumb wheels -C- out of sealing flange.
- Pull assembly appliance assembly bell housing -D- back to hexagon nut -A- (Only for sealing flange with spring ring).

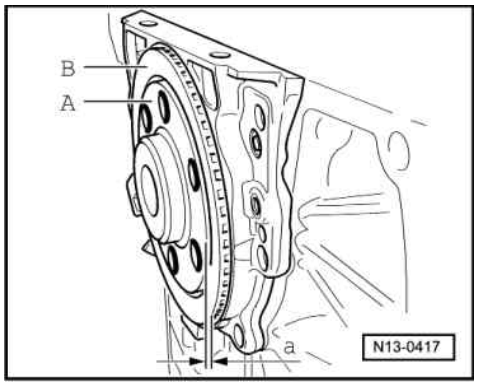

-> The sender wheel has the correct installation position on crankshaft when a gap of
-a- = 0.5 mm
exists between crankshaft flange -A- and sender wheel -B-.

Note:

If the sealing flange has a PTFE sealing ring, completely unbolt the assembly appliance T10017 and remove the sealing lip support ring.

To enable the measurements to be shown more clearly the crankshaft flange is illustrated without the fitted assembly appliance T10017.

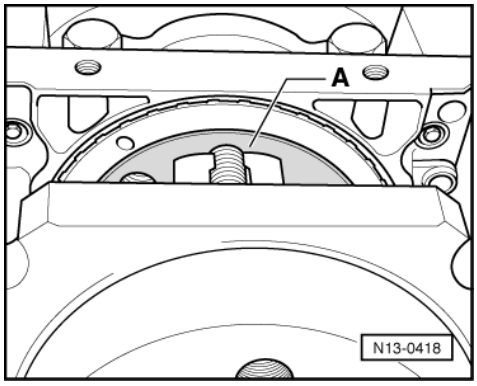

- -> Place a vernier caliper against the crankshaft flange -A- (hatched area).

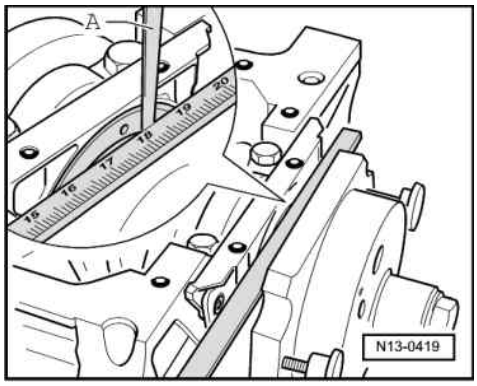

Protected by copyright. Copying for private or commercial purposes, in part or in whole, is not permitted unless authorised by Volkswagen AG. Volkswagen AG does not guarantee or accept any liability with respect to the correctness of information in this document. Copyright by Volkswagen AG.
satelettronica

- -> Measure the distance -a- between vernier caliper and sender wheel with a feeler gauge -A-.

Is measurement -a- too small:

- Re-press sender wheel =>Page 47 .

When dimension -a- is achieved:

- Remove assembly appliance.
- Tighten the new securing bolts for the sealing flange using alternate and diagonal sequence.
  Tightening torque: 12 Nm

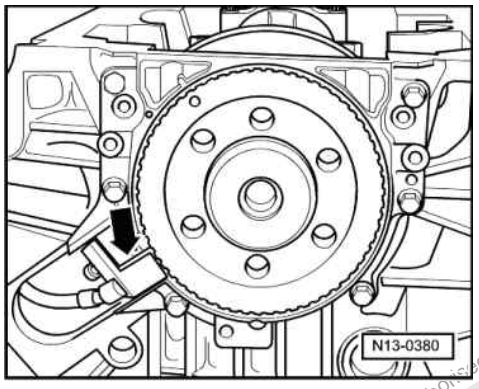

- -> Install engine speed sender -arrow-.
  Tightening torque: 5 Nm
- Install sump => Page 90 .
- Install intermediate plate.
- Install flywheel/drive plate with new bolts.

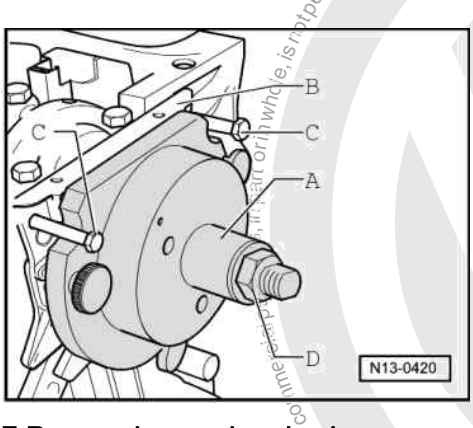

F-Re-pressing sender wheel

- -> Slide assembly bell housing -A- to sealing flange -B- by hand.
- Screw two M6 x 35 mm bolts -C- into cylinder block to guide sealing flange -B-.
- Screw hexagon nut -D- along threaded spindle, by hand, until it contacts the assembly bell housing -A-.

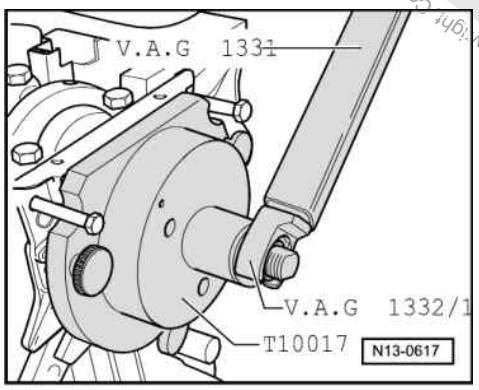

Protected by copyright. Copyright by Volkswagen AG.
Copyright by Volkswagen AG. Volkswagen AG does not guarantee or accept any liability with respect to the correctness of information in this document.
satelettronica

- -> Tighten assembly appliance hexagon nut with torque wrench V.A.G 1331 and open ring spanner insert V.A.G 1332/11.
  Tightening torque: 40 Nm
- Check installation position of sender wheel on crankshaft again => Page 46 .

If dimension -a- is too small again:

- Tighten hexagon nut to
  45 Nm.
- Check installation position of sender wheel on crankshaft again => Page 46 .

2.5 - Crankshaft dimensions

Honing dimensions in mm	Conrod journal ø
Basic dimension	-0.022 47.80 -0.037
1st undersize	-0.022 47.55 -0.037
2nd undersize	-0.022 47.30 -0.037
3rd undersize	-0.022 47.05 -0.037

Protected by copyright. Copying for private or commercial purposes, in part or in whole, is not permitted unless authorised by Volkswagen AG. Volkswagen AG does not guarantee or accept any liability with respect to the correctness of information in this document. Copyright by Volkswagen AG.

satelettronica

3 - Dismantling and assembling pistons and conrods

3.1 - Dismantling and assembling pistons and conrods

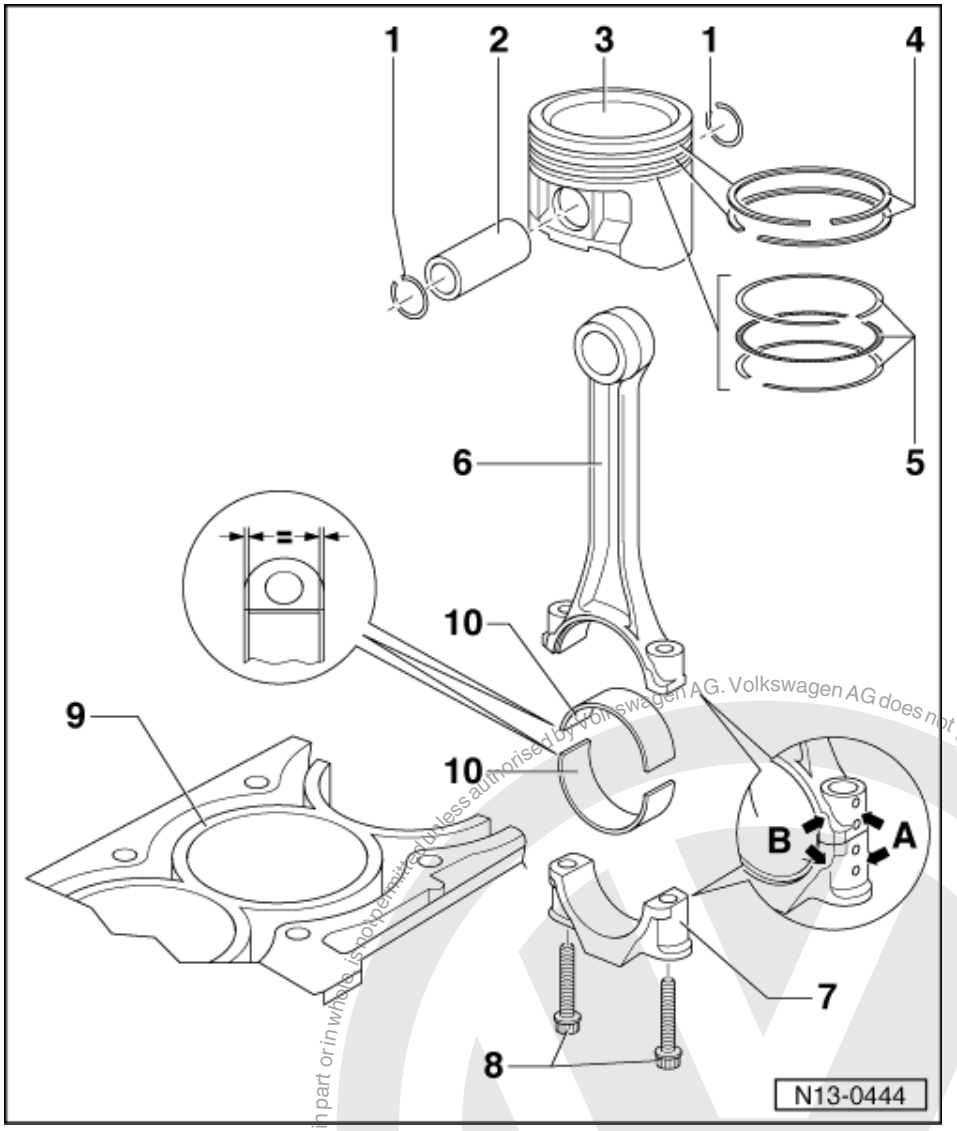

1 Circlip
2 Piston pin
- If difficult to remove, heat piston to 60 °C
- Remove and install with drift 10-14

3 Piston
- Checking => Fig. 3
- Mark installation position and cylinder number
- Arrow on piston crown points to pulley end
- Install using piston ring clamp

Protected by copyright. Copying for private or commercial purposes, in part or in whole, is not permitted unless authorised by Volkswagen AG. Volkswagen AG does not guarantee or accept any liability with respect to the correctness of information in this document. Copyright by Volkswagen AG.
satelettronica

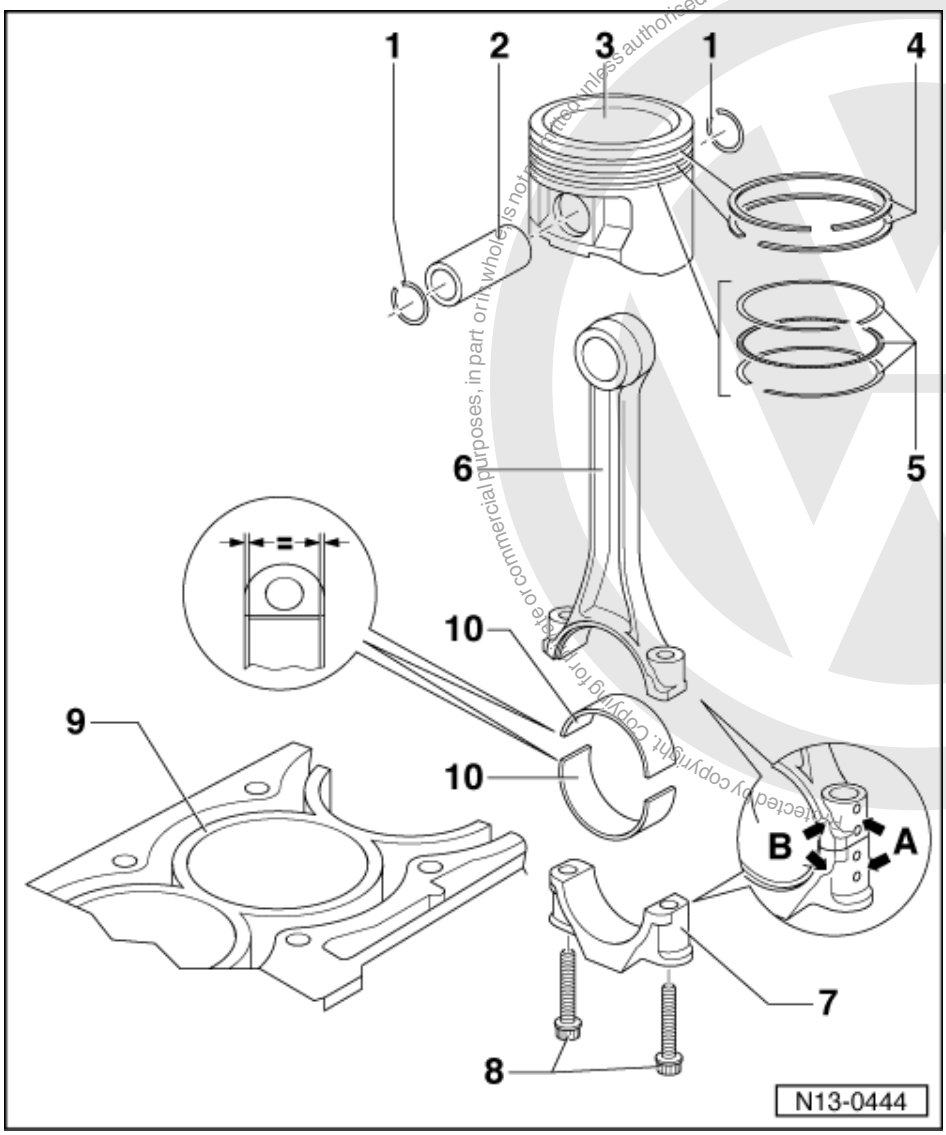

4 Compression rings
- Offset gaps by 120 °
- Remove and install compression rings with piston ring pliers
- "TOP" faces towards piston crown
- Checking ring gap=> Fig. 1
- Checking ring to groove clearance
  => Fig. 2

5 Oil scraper rings
- Carefully remove and install 3-part oil scraper rings by hand
- Checking ring gap=> Fig. 1
- Checking ring to groove clearance
  => Fig. 2

6 Conrod
- Only renew as a set
- Mark cylinder number -A-
- Installation position:
  Marking -B- faces towards pulley end
- Guided axially via piston

Copyright by Volkswagen AG. Volkswagen AG does not guarantee or accept any liability with respect to the correctness of information in this document. Copyright by Volkswagen AG.
satelettronica

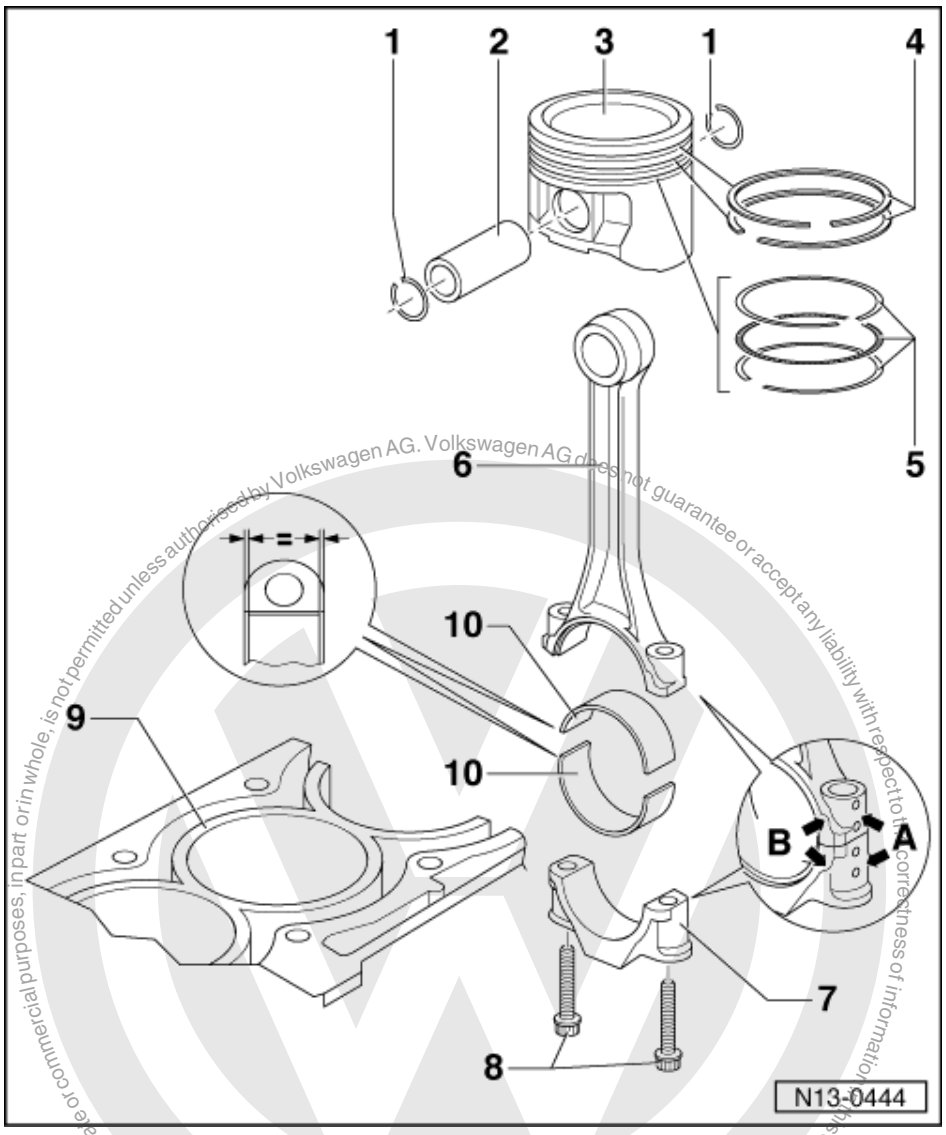

7 Conrod bearing cap
- The caps only fit in one position and only on the appropriate con-rod, this is due to the breaking procedure (cracking) separating the cap from the con-rod

8 Conrod bolt, 20 Nm + 1/4 turn (90 °) further
- Renew
- Oil threads and contact surface
- To measure radial clearance tighten to 20 Nm but not further

9 Cylinder block
- Checking cylinder bores
  =>Fig. 4
- Piston and cylinder dimensions
  =>Page 55

satelettronica

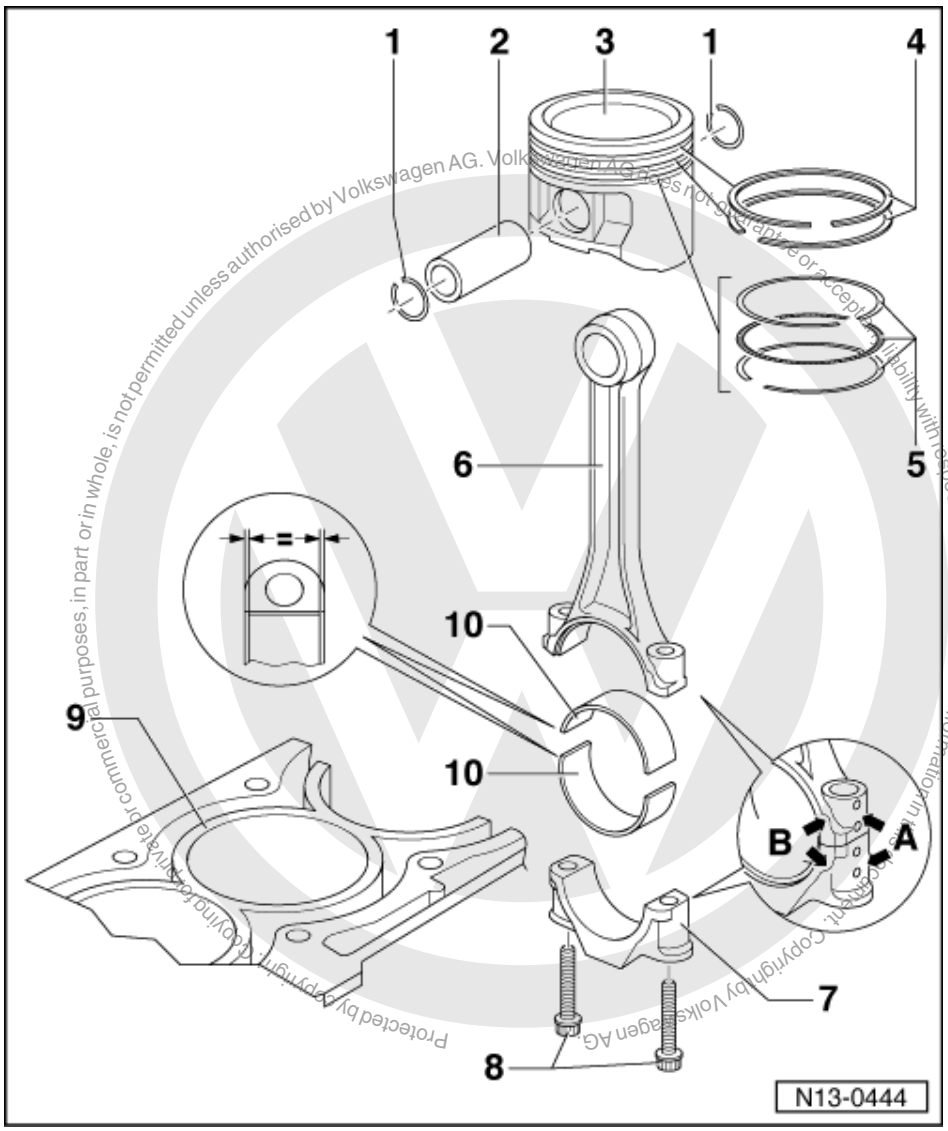

10 Bearing shell

- Do not interchange used bearing shells
- Measure pretension
  => Fig. 5
- Insert bearing shells centrally
- Check radial clearance with Plastigage:
  New: 0.020...0.061 mm
  Wear limit: 0.091 mm
  Do not rotate crankshaft when checking radial clearance

satelettronica

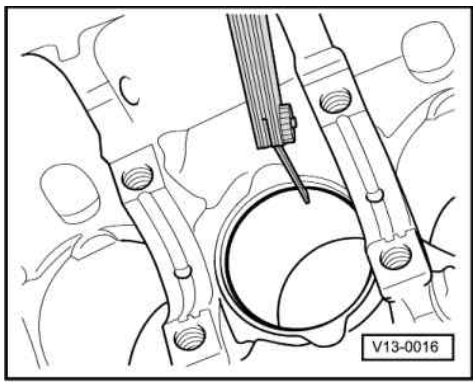

-> Fig. 1 Checking piston ring gap

- Push ring squarely from above down to approx. 15 mm from bottom end of cylinder.

Piston ring Dimensions in mm	New	Wear limit
1. Compression ring	0.20...0.50	1.0
2. Compression ring	0.40...0.70	1.0
Oil scraper ring	0.25...0.50	---1)

1) No wear limit details

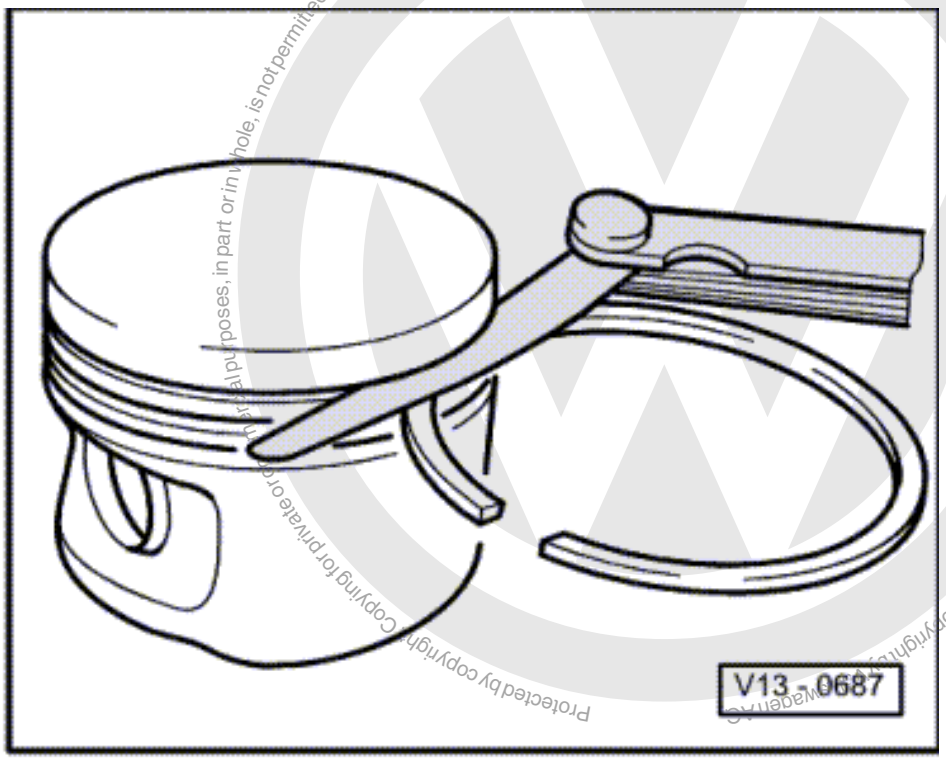

-> Fig. 2 Checking ring to groove clearance

Clean groove before check.

Piston ring Dimensions in mm	New	Wear limit
1. Compression ring	0.04...0.08	0.15

Protected by copyright. Copying for private or commercial purposes, in part or in whole, is not permitted unless authorised by Volkswagen AG. Volkswagen AG does not guarantee or accept any liability with respect to the correctness of information in this document. Copyright by Volkswagen AG.
satelettronica

Piston ring Dimensions in mm	New	Wear limit
2. Compression ring	0.02...0.06	0.15
Oil scraper ring	Cannot be measured	

-> Fig. 3 Checking piston

Special tools, workshop equipment, testers, measuring instruments and auxiliary items required

- Micrometer 75...100 mm

- Approx. 10 mm from lower edge and offset 90 ° to piston pin axis. Deviations from nominal dimensions max. 0.04 mm

  Nominal dimension => Page 55 ; Piston and cylinder dimensions

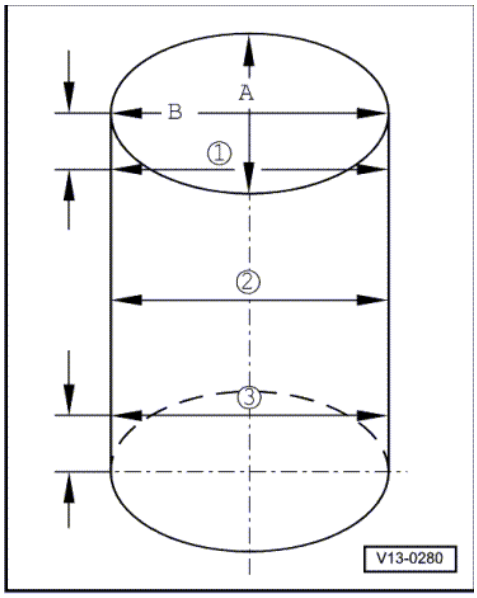

-> Fig. 4 Checking cylinder bores

Special tools, workshop equipment, testers, measuring instruments and auxiliary items required

- Internal dial gauge 50...100 mm

- Take measurements at 3 positions in both lateral -A- and longitudinal -B- directions, as illustrated. Deviation from nominal dimension

Protected by copyright. Copying for private or commercial purposes, in part or in whole, is not permitted unless authorised by Volkswagen AG. Volkswagen AG does not guarantee or accept any liability with respect to the correctness of information in this document. Copyright by Volkswagen AG.
satelettronica

max. 0.08 mm

Nominal dimension => Page 55 ; Piston and cylinder dimensions

Note:

Measuring the cylinder bores must not be done when the cylinder block is mounted on a repair stand with adapter bracket VW 540, as incorrect measurements would then be possible.

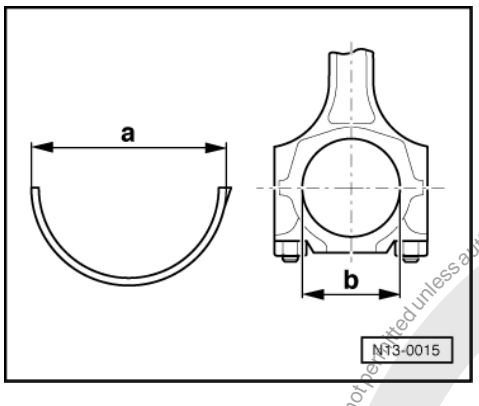

-> Fig. 5 Measuring bearing shell pretension

Special tools, workshop equipment, testers, measuring instruments and auxiliary items required

- Vernier caliper

The bearing shell pretension is calculated as follows:

Bearing shell dimension -a-
- Conrod diameter -b-
= Pretension

Minimum dimension: 1.5 mm

If the pretension is not achieved:

- Renew bearing shells.

3.2 - Piston and cylinder dimensions

Honing dimension		Piston-ø	Cylinder bore-ø
Basic dimen.	mm	76.475	76.51
1st oversize	mm	76.725	76.76
2nd oversize	mm	76.975	77.01

Protected by copyright. Copying for private or commercial purposes, in part or in whole, is not permitted unless authorised by Volkswagen AG. Volkswagen AG does not guarantee or accept any liability with respect to the correctness of information in this document. Copyright by Volkswagen AG.
satelettronica

15 - Cylinder head, Valve gear

1 - Removing and installing cylinder head

1.1 - Removing and installing cylinder head

Checking compressions=> Page 67

Notes:

- When installing an exchange cylinder head, all the contact surfaces between the support elements, roller rocker fingers and the cams must be oiled before installing the camshaft housing.
- The plastic packing pieces for protecting the open valves must not be removed until immediately before fitting cylinder head.
- If the cylinder head is replaced, all the coolant in the system must also be renewed.

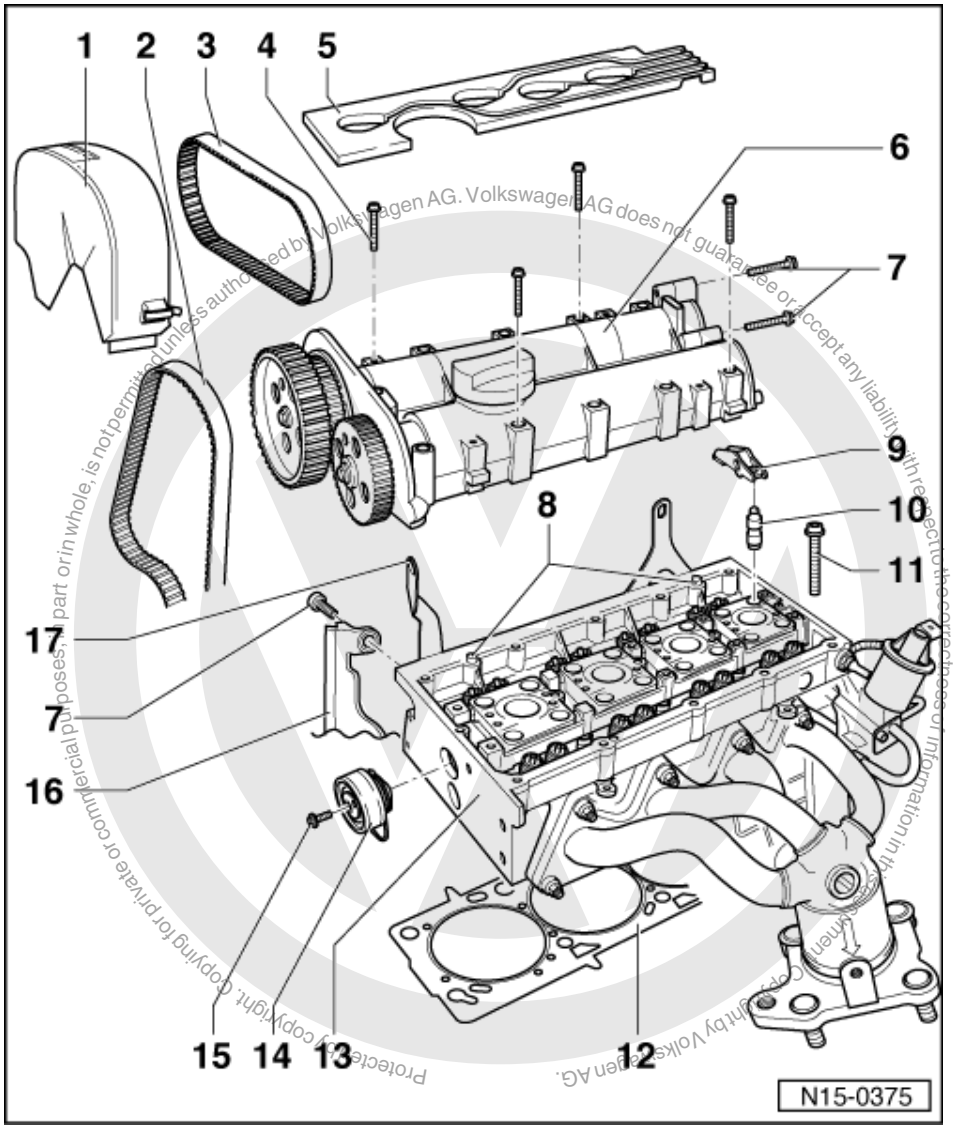

1 Toothed belt guard - upper part
2 Main drive toothed belt
- Check for wear
- Do not kink

satelettronica

- Removing, installingand tensioning
  => Page 24

3 Coupling drive toothed belt
- Check for wear
- Do not kink
- Removing, installing and tensioning
  => Page 24

4 10 Nm + 1/4 turn (90 °) further
- Renew
- Tighten from centre outwards

5 H.T. cable guide

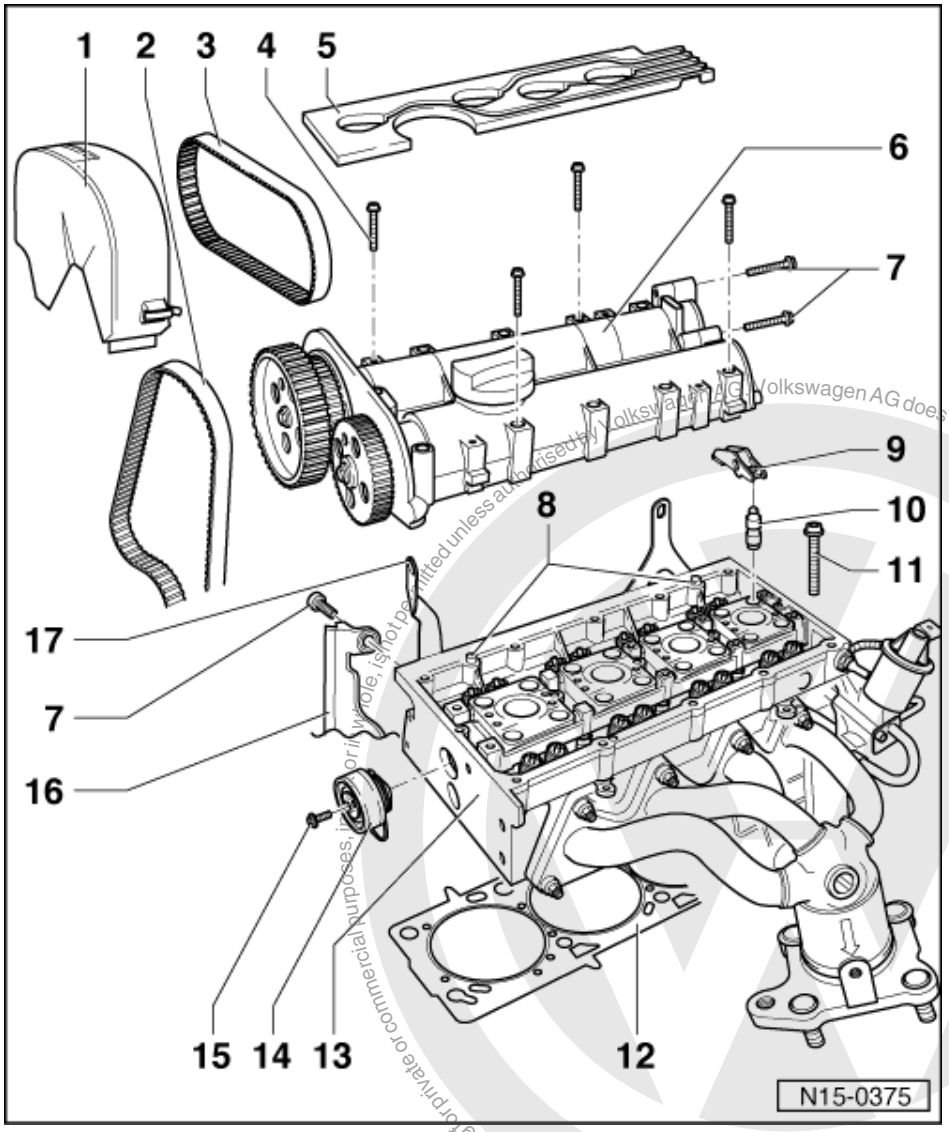

6 Camshaft housing
- Removing and installing
  => Page 60
- Remove remnants of old sealant
- Carefully clean sealing surfaces. They must be free of oil and grease.
- Coat with AMV 188 003 before fitting
- When installing fit vertically from above onto studs and dowel pins

7 10 Nm

8 Fitted pins

9 Roller rocker finger
- Check bearing for ease of movement
- Oil contact surface

satelettronica
Volkswagen AG does not guarantee or accept any liability with respect to the correctness of information in this document. Copyright by Volkswagen AG
Reproduced by copyright. Copying for private or commercial purposes, in whole or in part, is not permitted unless authorised by Volkswagen AG

- Use securing clip to clip onto support element when installing

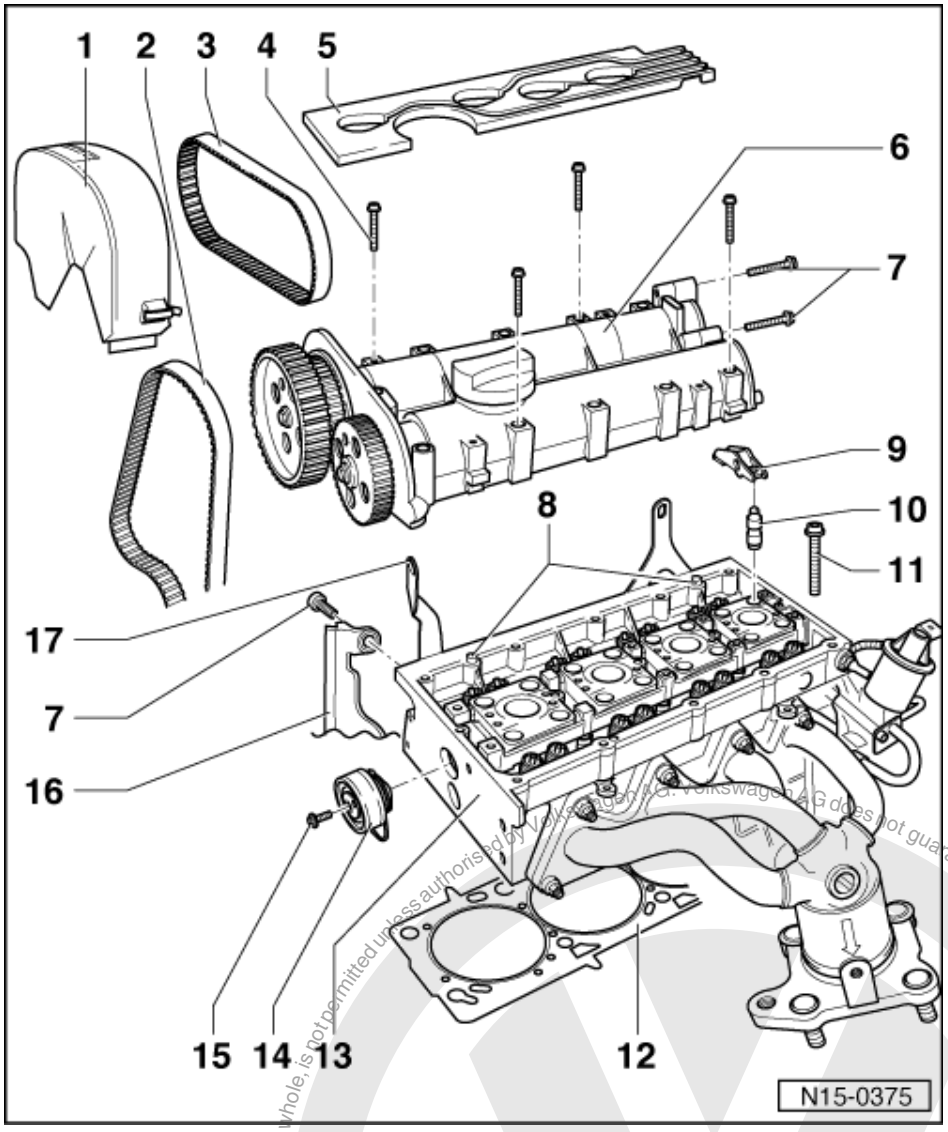

10 Support element
- Do not interchange
- With hydraulic valve clearance compensation
- Oil contact surface

11 Cylinder head bolt
- Renew
- Note installation instructions and sequence when loosening and tightening => Page 63

12 Cylinder head gasket
- Renew
- Metal gasket
- After replacing renew the complete coolant

Protected by copyright. Copying for private or commercial purposes, in part or in whole, is not permitted unless authorised by Volkswagen AG. Volkswagen AG does not guarantee or accept any liability with respect to the correctness of information in this document. Copyright by Volkswagen AG.
satelettronica

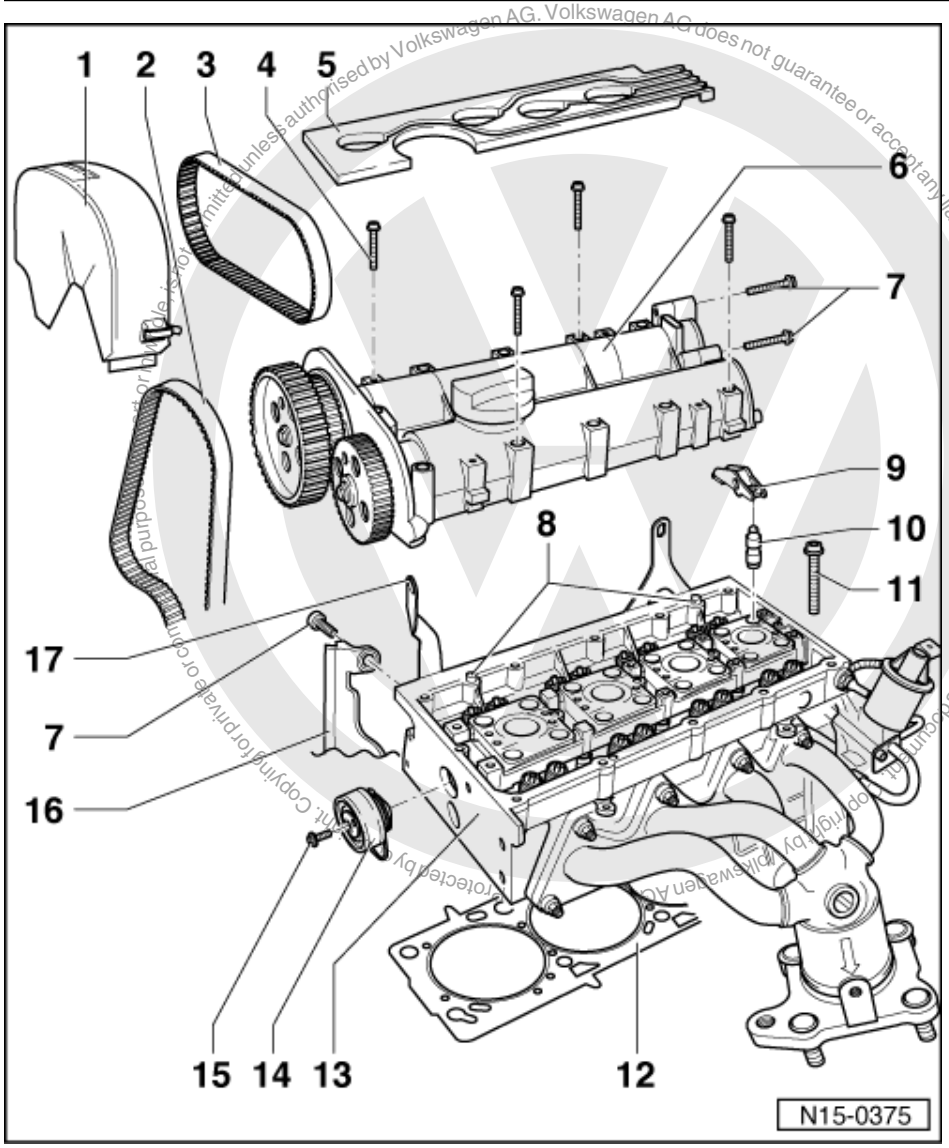

13 Cylinder head

- Removing and installing
  => Page 63
- Check for distortion => Fig. 1
- Sealing surfaces in contact with camshaft housing must be free of oil and grease
- After replacing renew the complete coolant

14 Coupling drive tensioning roller

- Checking => Page 30
- Tensioning toothed belts
  => Page 24

15 20 Nm

16 Rear toothed belt guard

17 Lifting eye

satelettronica

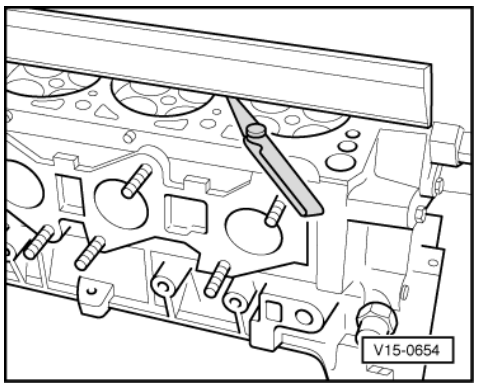

-> Fig. 1 Checking cylinder head for distortion

Max. permissible distortion: 0.05 mm

1.2 - Removing and installing camshaft housing

Special tools, workshop equipment, testers, measuring instruments and auxiliary items required

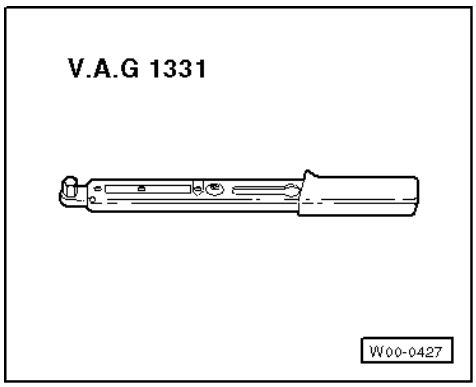

- V.A.G 1331 Torque wrench (5...50 Nm)
- Two studs (M 6 x 70)
- D 188 003 A1 Sealant

Removing

Notes:

- The camshafts are mounted in the camshaft housing on this engine. Therefore, the main drive toothed belt must be removed before the camshaft housing can be removed.
- The camshaft housing sealing surface must not be reworked.

Work sequence

- First check whether a coded radio is fitted. If this is the case obtain the anti-theft coding.
- With the ignition switched off disconnect the battery earth strap.
- First remove main drive toothed belt
  => Page 24 .
- Remove spark plug connectors with H.T. cables.
- Pull 4 pin connector off ignition transformer.
- Pull connector off Hall sender.

Protected by copyright. Copying for private or commercial purposes, in part or in whole, is not permitted unless authorised by Volkswagen AG. Volkswagen AG does not guarantee or accept any liability with respect to the correctness of information in this document. Copyright by Volkswagen AG.
satelettronica

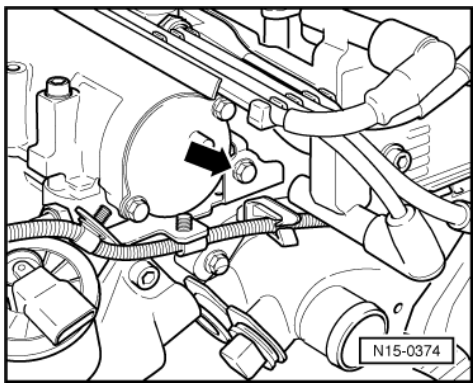

- -> Remove securing bolt -arrow- from cable retainer.
- Remove toothed belt guard rear securing bolt (in area of right-hand lifting eye).
- Loosen camshaft housing bolts (from outside to inside and in cross-over sequence) and remove.
- Carefully lift camshaft housing off.

Installing

Prerequisites

- The pistons must not be positioned at TDC.
- Camshaft sprockets locked into camshaft housing fitting holes with T 10016 and secured against turning.

- Remove sealant remnants on cylinder head and camshaft housing with a commercially available sealant remover.
- Prevent dirt and sealant remnants from entering cylinder head.

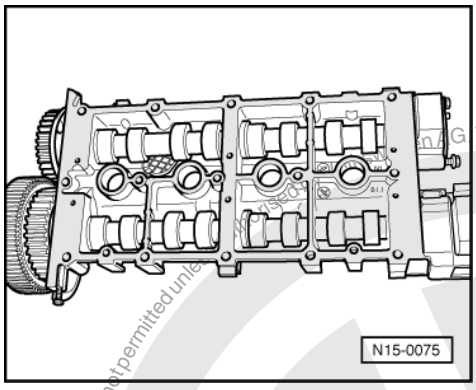

- Clean sealing surfaces carefully. They must be free of oil and grease.
- -> Apply a thin even coat of sealant onto the clean camshaft housing sealing surface. See hatched area on illustration.

Note:

The sealant must not be applied too thick otherwise excess sealant can enter the oil channels and cause damage to the engine.

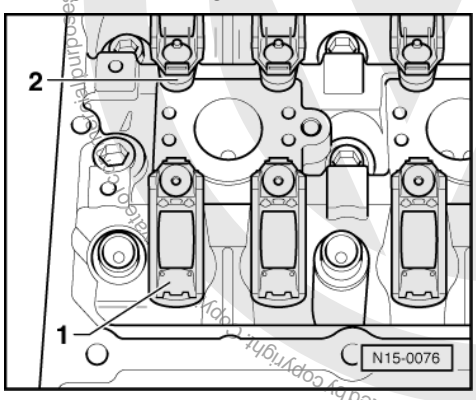

satelettronica
Volkswagen AG does not guarantee or accept any liability with respect to the correctness of information in this document. Copyright by Volkswagen AG.
Protected by copyright. Copying for private or commercial purposes, in part or in whole, is not permitted unless authorised by Volkswagen AG.

- -> Ensure all roller rocker fingers contact the valve ends -1- correctly and they are clipped into their respective support elements -2-.
- Screw two studs (M6 x 70) into cylinder head before installing camshaft housing.

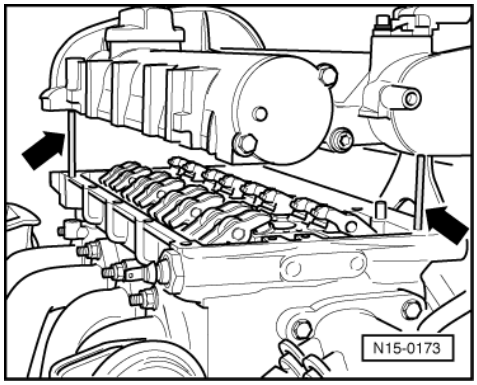

- -> Carefully fit the camshaft housing vertically onto the cylinder head studs and dowel pins -arrows- from above.

Note:

◆ Ensure that no oil residue can drip onto the coated sealing surfaces.

- Tighten camshaft housing new securing bolts (evenly from inside to outside using cross-over sequence).

Ensure that camshaft housing is not canted.
Tightening torque: 10 Nm + 1/4 turn (90 °) further.

Note:

◆ Sealant must be left dry for approx. 30 minutes after installing camshaft housing.

Installing toothed belt and adjusting timing => Page 24 , Removing, installing and tensioning toothed belt.

The rest of the assembly is basically a reverse of the dismantling sequence.

Protected by copyright. Copying for private or commercial purposes, in part or in whole is not permitted unless authorised by Volkswagen AG. Volkswagen AG does not guarantee or accept any liability with respect to the correctness of information in this document. Copyright by Volkswagen AG.
satelettronica

1.3 - Removing and installing cylinder head

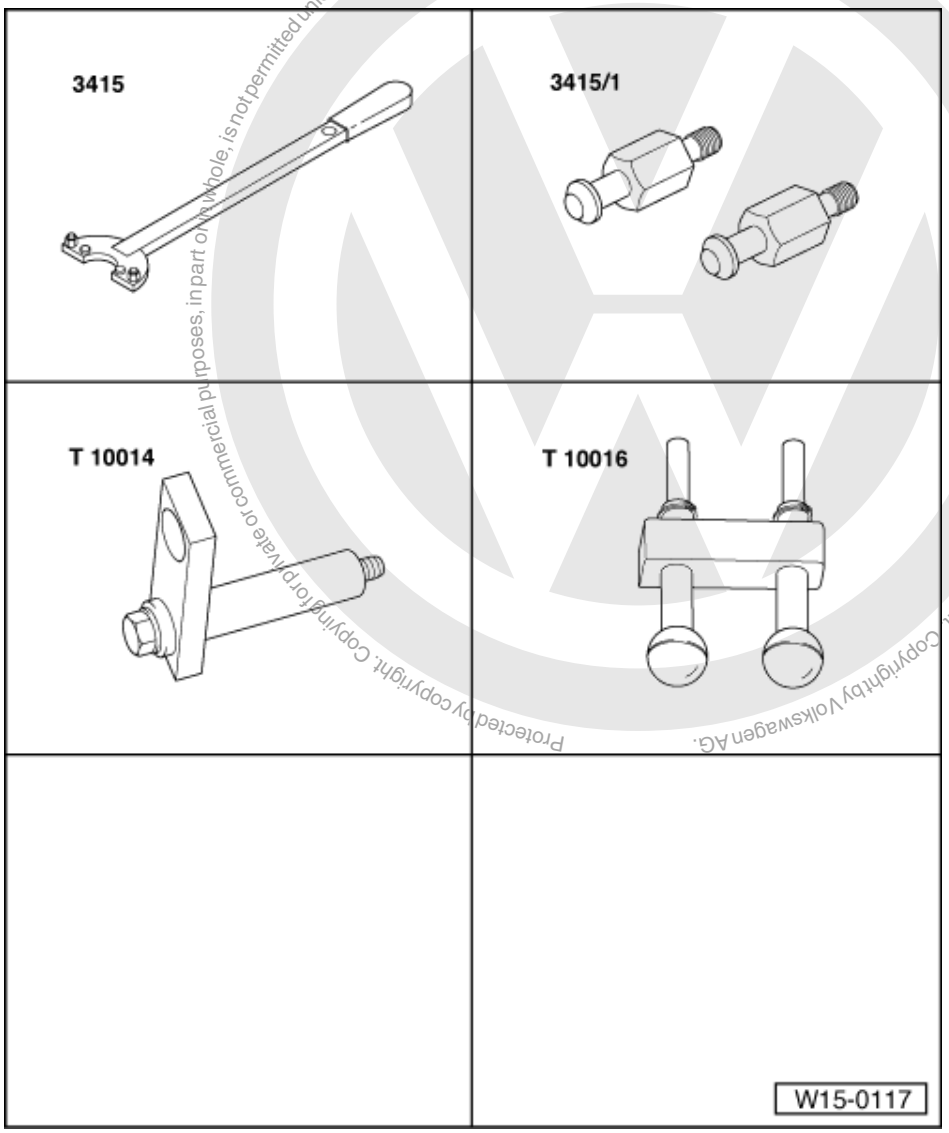

Protected by copyright. Copying for private or commercial purposes, in part or in whole, is not permitted unless authorised by Volkswagen AG. Volkswagen AG does not guarantee or accept any liability with respect to the correctness of information in this document. Copyright by Volkswagen AG.
satelettronica

Special tools, workshop equipment, test and measuring appliances and auxiliary items required

- 3415/1 Bolts
- 3415 Counter support
- T 10014 Retainer
- T 10016 Camshaft locking device

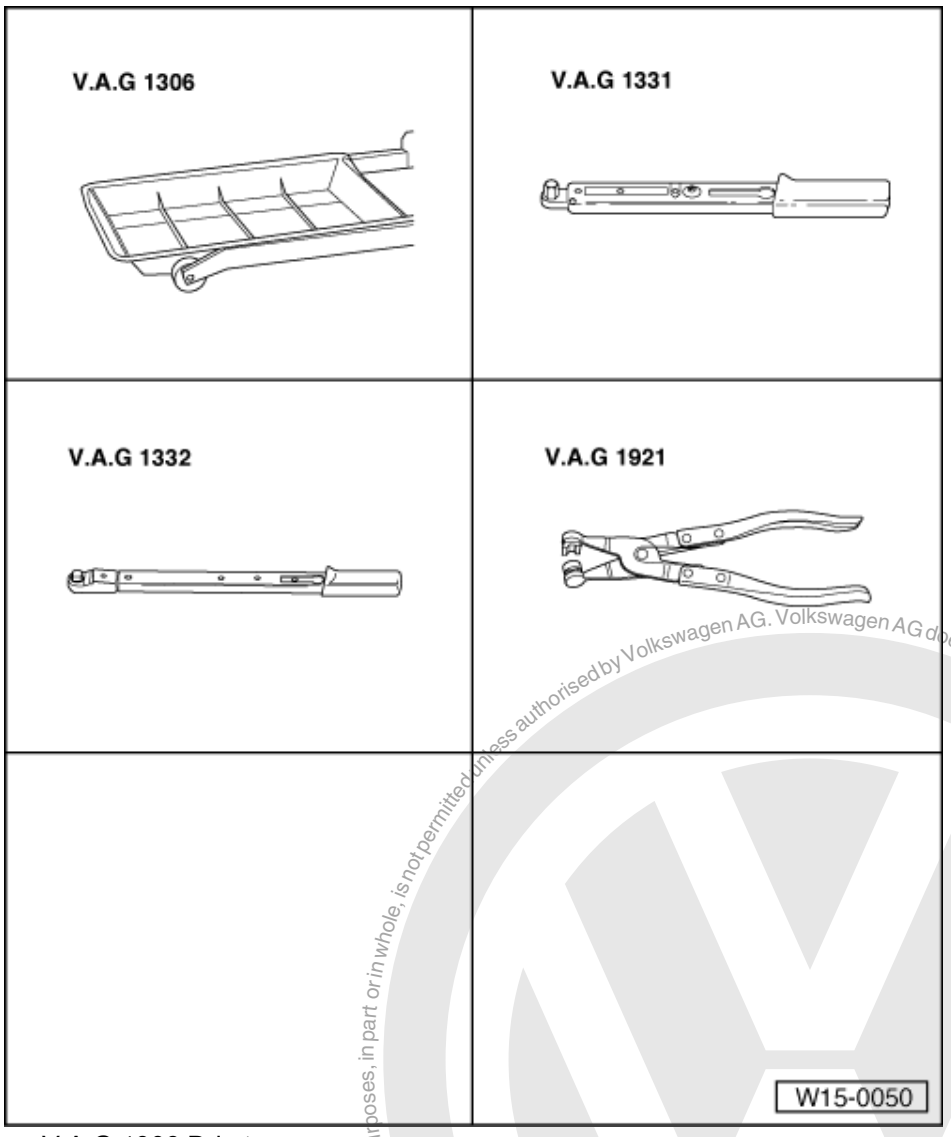

- V.A.G 1306 Drip tray
- V.A.G 1331 Torque wrench (5...50 Nm)
- V.A.G 1332 Torque wrench (40...200 Nm)
- V.A.G 1921 Pliers for spring-type clips or VAS 5024 assembly tool for spring-type clips
- D 188 003 A1 Sealant

Prerequisites

- The engine must be no more than warm to touch.
- The pistons must not be positioned at TDC.

Removing

- First check whether a coded radio is fitted. If this is the case obtain the anti-theft coding.
- With the ignition switched off disconnect battery earth strap.
- First remove main drive toothed belt
  => Page 24 .
- Remove camshaft housing
  => Page 60 .
- Remove roller rocker finger together with support elements and place on a clean surface.
- Ensure the roller rocker fingers and the support elements are not interchanged.
- Open and close the expansion tank sealing cap to release pressure in cooling system.
- Drain coolant => Page 107 .
- Loosen hose clips and pull coolant hoses off coolant thermostat housing.
- Remove oil dipstick tube.

Copyright by Volkswagen AG. Volkswagen AG does not guarantee or accept any liability with respect to the correctness of information in this document. Copyright by Volkswagen AG. Copy for private or commercial purposes, in part or in whole, is not permitted unless authorised by Volkswagen AG.
satelettronica

- Disconnect fuel supply and fuel return pipes at fuel rail.

> Warning!
> Fuel supply lines are under pressure! Before removing from hose connection wrap a cloth around the connection. Then release pressure by carefully pulling hose off connection.

- Loosen or separate the following components:
  - The hose from crankcase breather
  - The hose from activated charcoal filter system to throttle valve control unit
  - The vacuum hose from brake servo to intake manifold
  - The vacuum hose from exhaust gas recirculation valve to brake servo vacuum hose junction piece
  - The 2 pin connector from knock sensor (rear of cylinder block) and the 4 pin connector from intake manifold pressure sender (front right under intake manifold).

  - The connector from engine speed sender below oil dipstick tube bracket, and pull connector out from retainer
  - The connector from coolant temperature sender, oil pressure switch and exhaust gas recirculation valve
  - Injector connectors

  Remove front exhaust pipe from exhaust manifold.
  Unbolt bracket from exhaust manifold on cylinder block => Page 148 ; Item 6 .
  Pull the clamps which secure the coolant pipe to coolant pump off the thermostat housing.

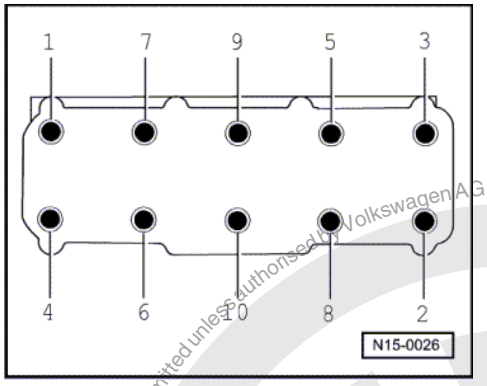

- -> Loosen socket head bolts in the sequence given and then remove completely.
- Carefully lift cylinder head off.

Installing

Notes:

- Only remove the new cylinder head gasket from its packing immediately before installing.
- Handle the new gasket with extreme care. Damaging will lead to leaks.

- Place a clean cloth in cylinders so that no dirt or emery cloth particles can get in between cylinder wall and piston.
- Carefully clean cylinder head and cylinder block sealing surfaces. Thereby ensuring that no scoring or scratches are formed (when using abrasive paper the grade must not be less than 100).
- Carefully remove metal particles, emery remains and cloths.
- Set No. 1 cylinder piston to top dead centre and then turn crankshaft back slightly.
- Fit new cylinder head gasket. Lettering (Part No.) must be readable.
- Place cylinder head on. When doing this observe the centralizing pins in cylinder block.

Protected by copyright. Copying for private or commercial purposes, in part or in whole, is not permitted unless authorised by Volkswagen AG. Volkswagen AG does not guarantee or accept any liability with respect to the correctness of information in this document. Copyright by Volkswagen AG.
satelettronica

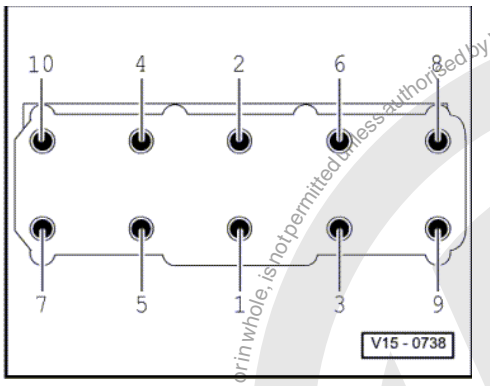

- Fit new cylinder head bolts and tighten hand tight.
- -> Tighten cylinder head in tightening sequence as follows:
- Tighten all bolts to 30 Nm.
- Then tighten all bolts a 1/4 turn (90 °) further using a rigid wrench.
- Then tighten all bolts again a 1/4 turn (90 °) further.
- Insert support element in cylinder head and fit roller rocker finger onto respective valve stem end and support element.
- Install camshaft housing,
  => Page 60 .

The rest of the assembly is basically a reverse of the dismantling sequence.

Filling with new coolant => Page 107 .

Protected by copyright. Copyright by Volkswagen AG.
Copyright by Volkswagen AG. Volkswagen AG does not guarantee or accept any liability with respect to the correctness of information in this document.
Copyright by Volkswagen AG. Reproduction, in whole or in part, is not permitted unless authorised by Volkswagen AG.
satelettronica

1.4 - Checking compression pressures

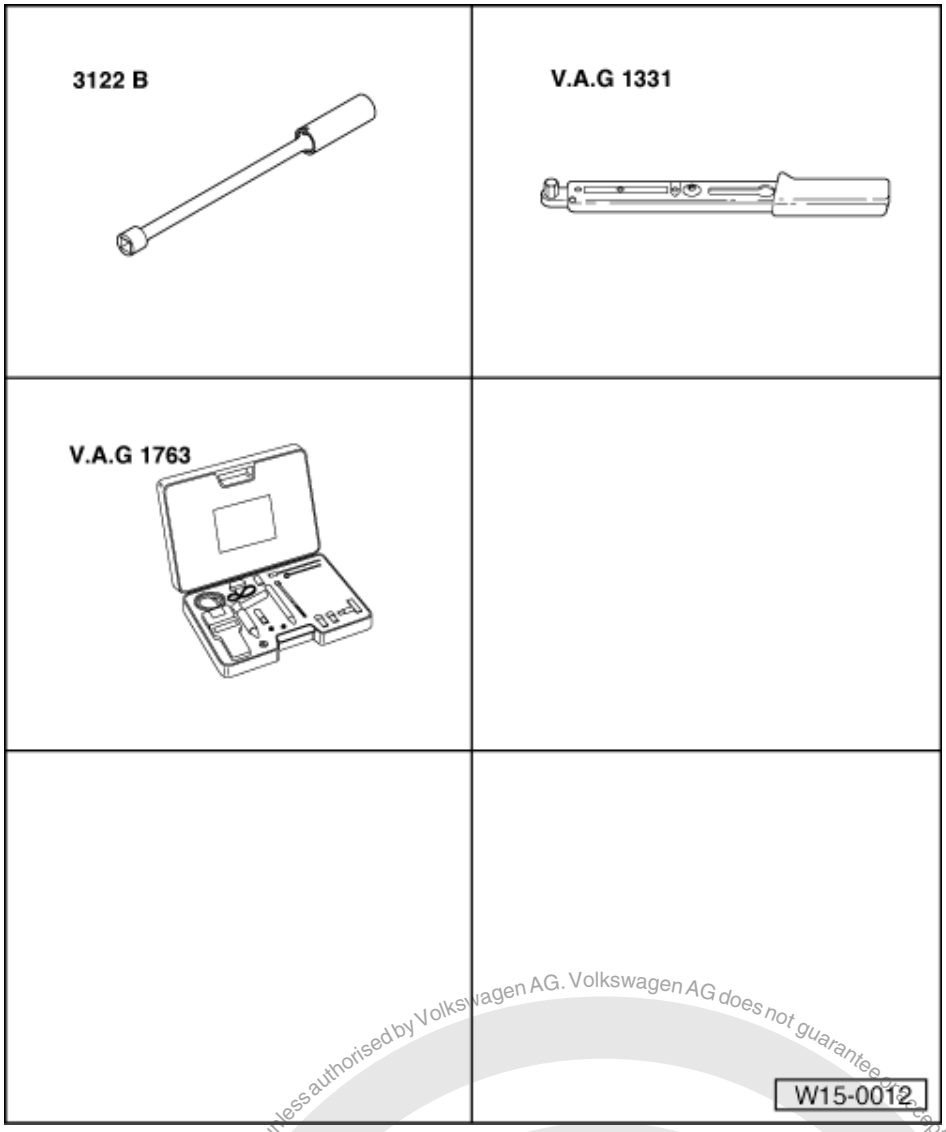

Special tools, workshop equipment, test and measuring appliances and auxiliary items required

- 3122 B Spark plug spanner
- V.A.G 1331 Torque wrench (5...50 Nm)
- V.A.G 1763 Compression tester

Test conditions

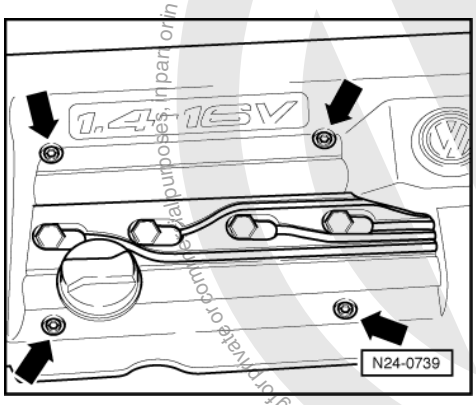

Protected by copyright. Copying for private or commercial purposes, in part or in whole, is not permitted unless authorised by Volkswagen AG. Volkswagen AG does not guarantee or accept any liability with respect to the correctness of information in this document. Copyright by Volkswagen AG.
satelettronica

- Engine oil temperature must be at least 30 °C.

Work sequence

- -> Remove cover above camshaft housing -arrows-.
- Take off H.T. wiring with spark plug connectors first.
- Unscrew spark plugs with spark plug spanner 3122 B.

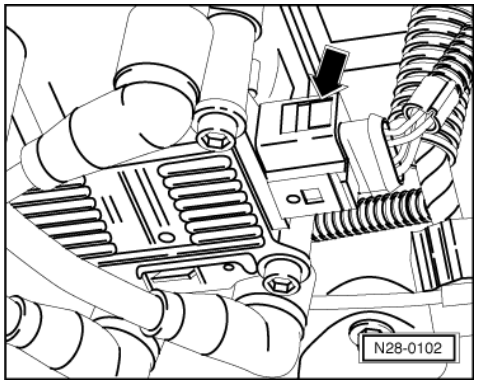

- -> Pull 4 pin connector off ignition transformer -arrow-.
- Use a second mechanic to fully depress accelerator pedal.
- Check compressions with compression tester V.A.G 1381 or V.A.G 1763.

Note:

See relevant test unit operating instructions for instructions on how to use test unit.

- Operate starter until tester shows no further pressure increase.

Compression pressure:

New: 10...15 bar
Wear limit: 7 bar

Permissible difference between all cylinders: 3 bar

Protected by copyright. Copying for private or commercial purposes, in part or in whole, is not permitted unless authorised by Volkswagen AG. Volkswagen AG does not guarantee or accept any liability with respect to the correctness of information in this document. Copyright by Volkswagen AG.

satelettronica

2 - Servicing valve gear

2.1 - Servicing valve gear

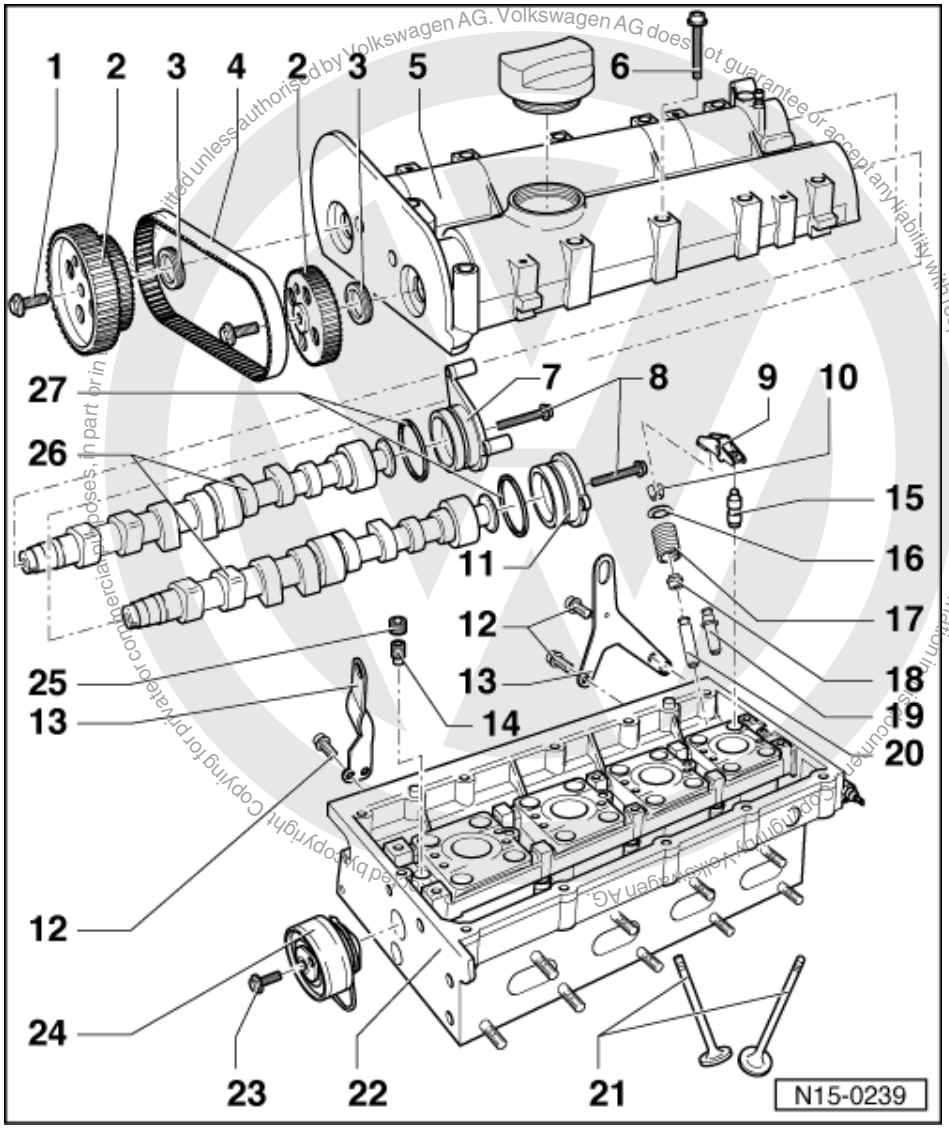

1 20 Nm + 1/4 turn (90 °) further
- Renew
- Use camshaft locking tool T 10016 to loosen and tighten=>Page 75 , Fig. 1

2 Camshaft sprocket
- Note position when installing the toothed belt
  => Page 24

3 Oil seal
- Only replace with camshaft installed
- Lightly oil sealing lip of oil seal
- Renewing=> Page 79

4 Coupling drive toothed belt
- Mark D.O.R. before removing
- Check for wear
- Do not kink
- Removing and installing
  => Page 24

satelettronica

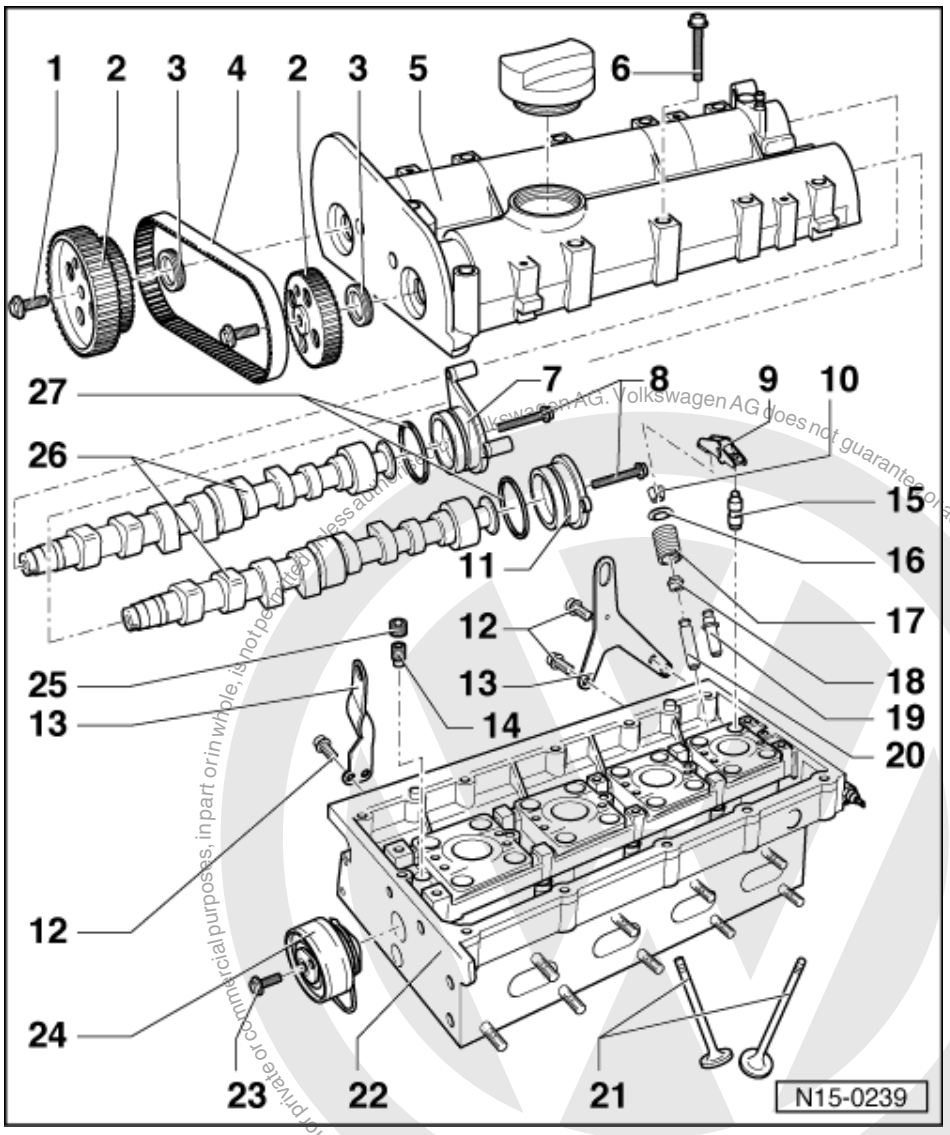

5 Camshaft housing
- Removing and installing
  => Page 60
- Remove sealant remnants
- Coat with AMV 188 003 before fitting
- When installing fit vertically from above onto studs and dowel pins

6 10 Nm + 1/4 turn (90 °) further
- Renew
- Tighten from centre outwards

7 Sealing cap/ignition transformer retainer

8 10 Nm

9 Roller rocker finger
- Check roller bearing
- Oil contact surface
- Use securing clip to clip onto support element when installing

satelettronica

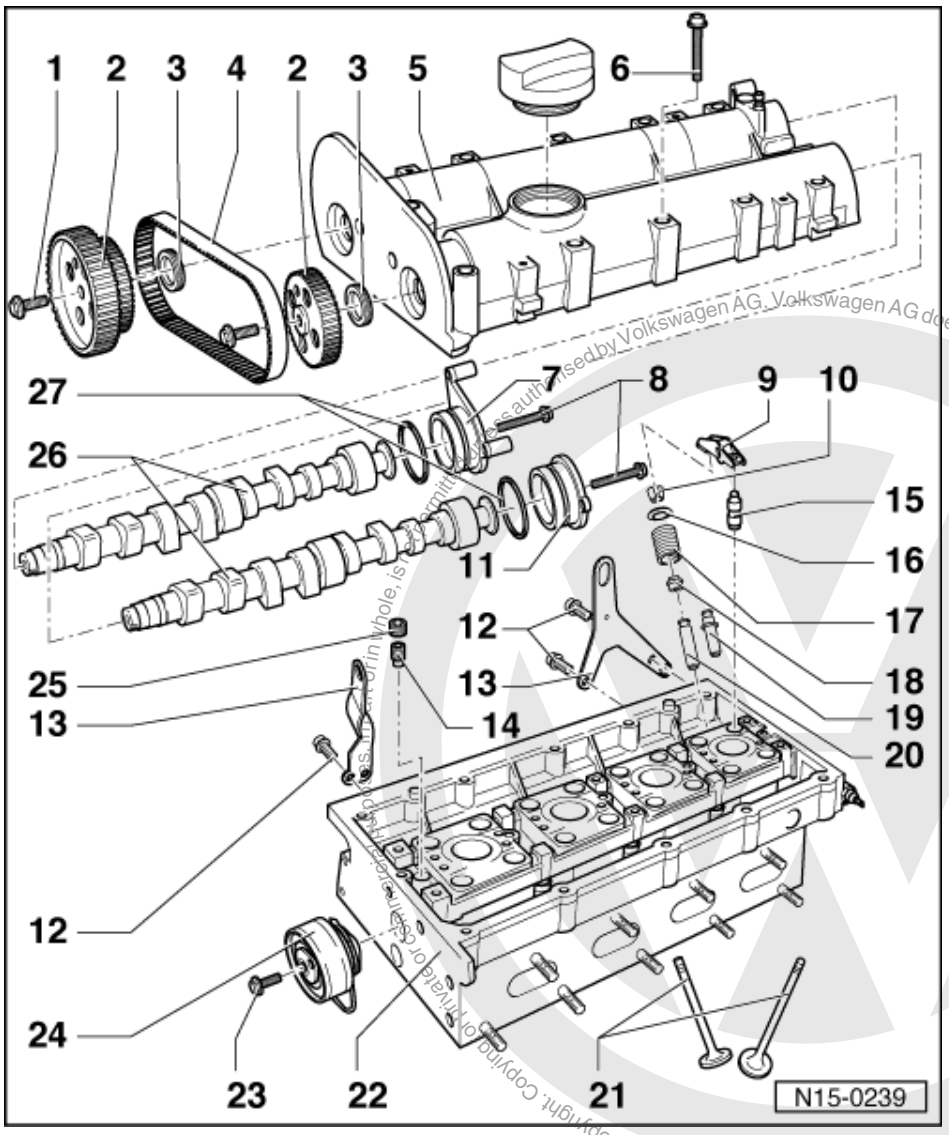

10 Cotters
11 Cap
12 20 Nm
13 Lifting eye
14 Non-return valve, 6 Nm
- Do not overtighten, otherwise the valve can stick
- Clean threads and insert with
  D 154 102 A1

15 Support element
- Check oil spray drillings
- With hydraulic valve clearance compensation
- Do not interchange
- Before installing check camshaft axial clearance => Page 76 , Fig. 3
- Oil contact surface

Protected by copyright. Copying for private or commercial purposes, in part or in whole, is not permitted unless authorised by Volkswagen AG. Volkswagen AG does not guarantee or accept any liability with respect to the correctness of information in this document. Copyright by Volkswagen AG.
satelettronica

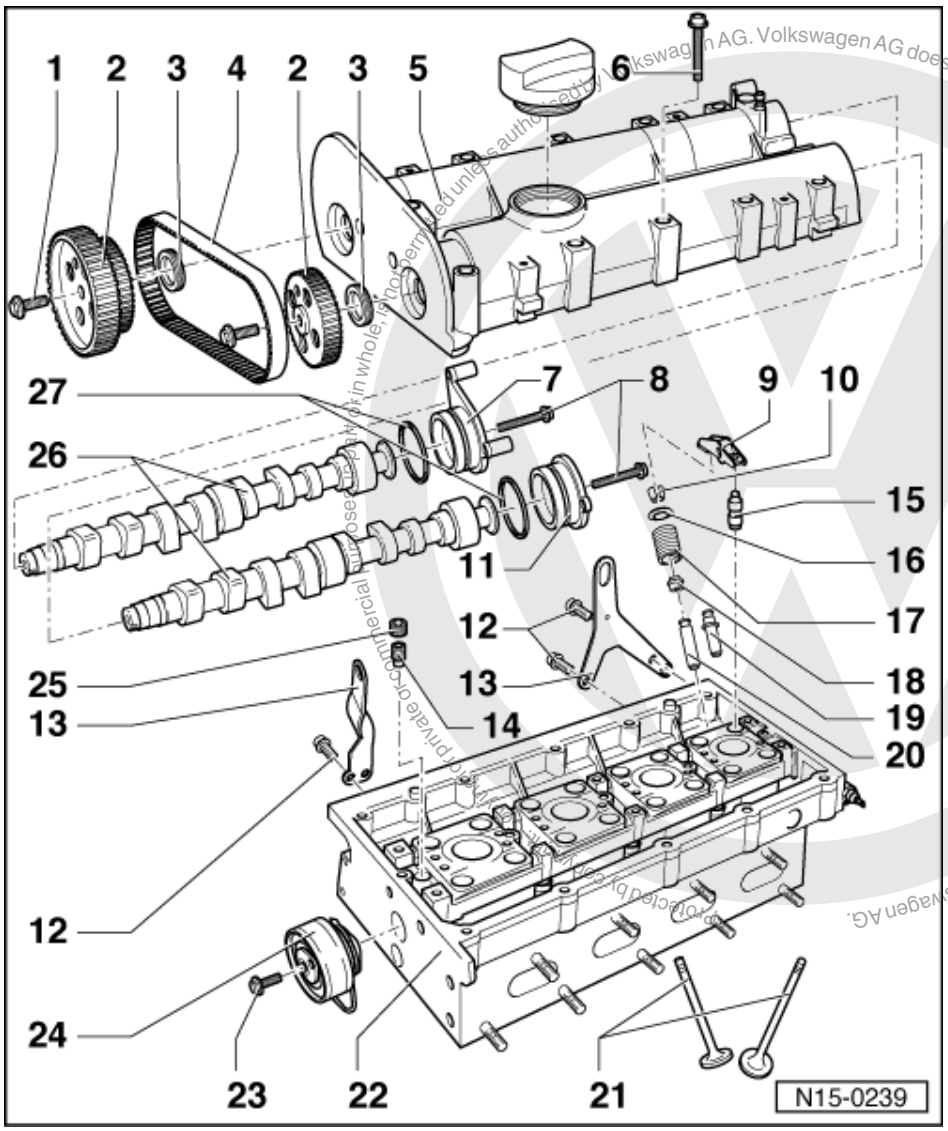

16 Upper valve spring plate

17 Valve spring

- Removing and installing:
  Cylinder head
  removed: with valve spring compressor 3362
  installed: => Page 83 , Renewing valve stem seals

18 Valve stem seal

- Renewing=> Page 83

19 Service part - valve guide

- With collar

20 Valve guide

- Checking => Page 81

21 Valves

- Do not rework only grinding-in is permitted
- Valve dimensions => Fig. 5

satelettronica

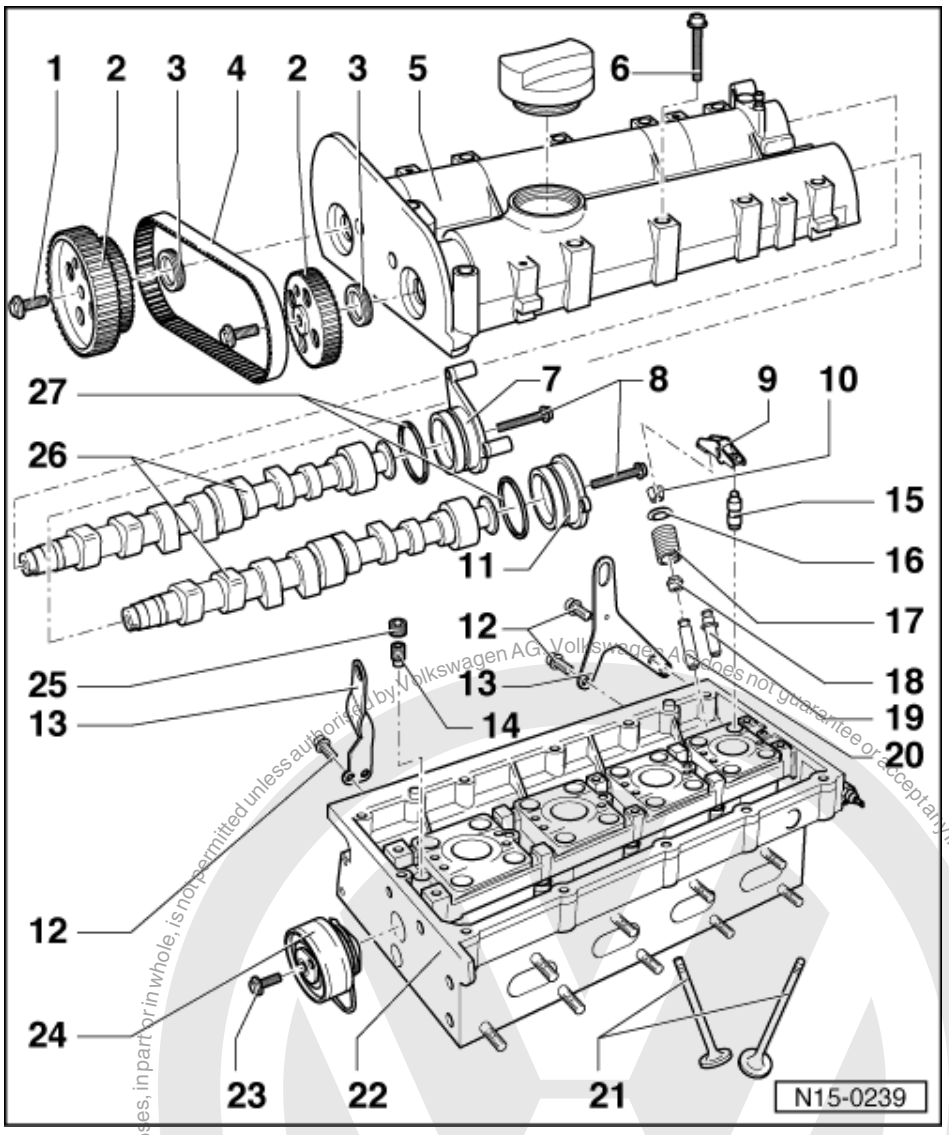

22 Cylinder head

- Reworking valve seats
  => Page 77
- Reworking sealing surface
  => Fig. 2

23 20 Nm

24 Tensioner

- Checking => Page 30
- Tensioning toothed belts
  => Page 24

25 Sealing plug, 45 Nm

- Insert with D 154 102 A1
- Must not be screwed in too far
- Maximum permitted insertion depth from top of plug to camshaft housing surface = 2 mm

Protected by copyright. Copying for private or commercial purposes, in part or in whole, is not permitted unless authorised by Volkswagen AG. Volkswagen AG does not guarantee or accept any liability with respect to the correctness of information in this document. Copyright by Volkswagen AG.
satelettronica

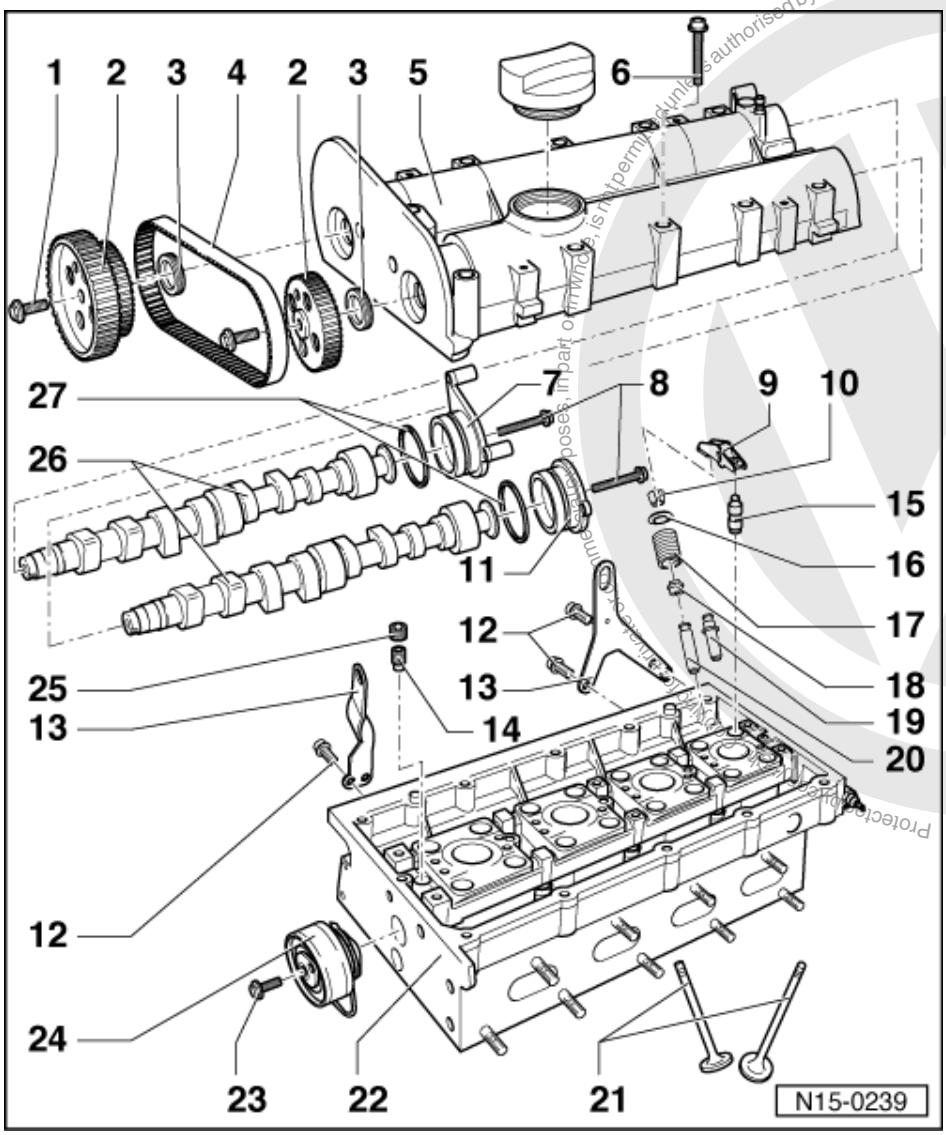

26 Camshafts

- Checking axial clearance => Fig. 3
- Coat with oil before inserting (also axle bearing shoulder)
- Identification and valve timing
  => Page 76 , Fig. 4
- After installing, replace seals
- Renewing seals=> Page 79

27 O-ring

- Renew
- Coat with oil before inserting

Volkswagen AG. Volkswagen AG does not guarantee or accept any liability with respect to the correctness of information in this document. Copyright by Volkswagen AG.
satelettronica

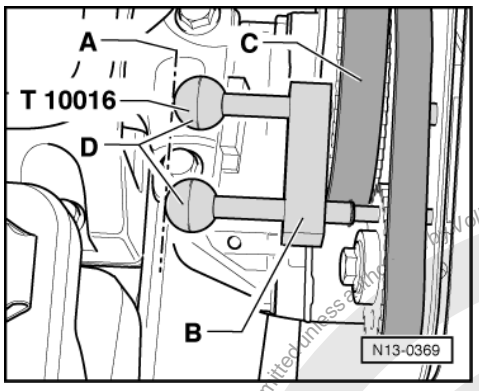

-> Fig. 1 Locking both camshaft sprockets with camshaft locking tool T 10016

- Guide both locking pins through camshaft sprocket locking pin holes onto stop in camshaft housing fitting holes.

Note:

Both locking pins are inserted correctly when the ends -D- align with line -A-.

- Slide retainer -B- onto stop on inlet camshaft sprocket -C-.
- When both camshaft sprockets are locked in the fitting holes the camshaft pulleys can be loosened or tightened.

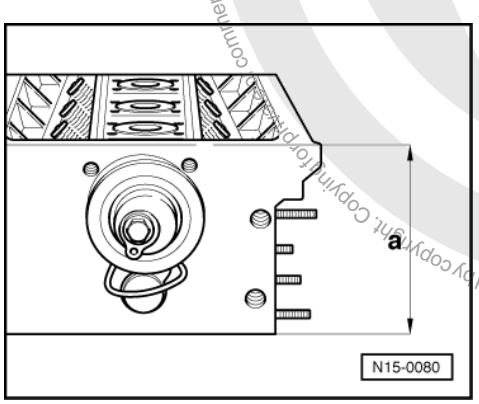

-> Fig. 2 Reworking cylinder head sealing surface

Cylinder head reworking dimension:
a = At least 108.25 mm

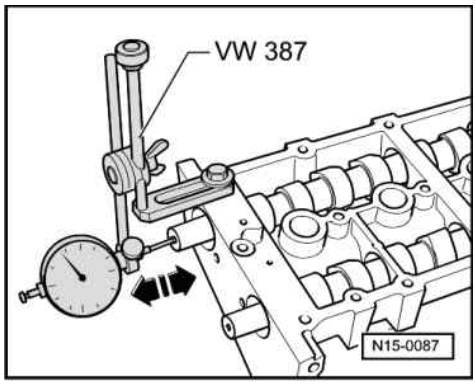

Protected by copyright. Copyright by Volkswagen AG. Volkswagen AG does not guarantee or accept any liability with respect to the correctness of information in this document. Copyright by Volkswagen AG. Commercial use or passing on to third parties is not permitted unless authorised by Volkswagen AG.
satelettronica

-> Fig. 3 Checking camshaft axial clearance

Special tools, workshop equipment, testers, measuring instruments and auxiliary items required

- VW 387 Universal dial gauge bracket
- Dial gauge

Perform measurements with camshaft housing removed and sealing cover fitted.

Wear limit: max. 0.40 mm

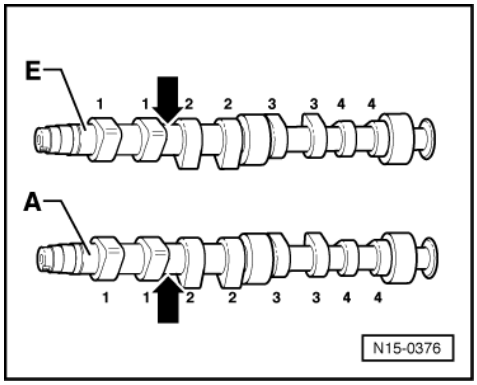

-> Fig.4 Camshaft identification, valve timing

Identification between cam pairs	
	Cyl. 1 & 2
Inlet shaft -E-	"036AC"
Exhaust shaft -A-	"036AA"

Valve timing at 1 mm valve lift

Inlet opens after TDC	19.1 °
Inlet closes after BDC	15.1 °
Exhaust opens before BDC	20.2 °
Exhaust closes before TDC	15.3 °

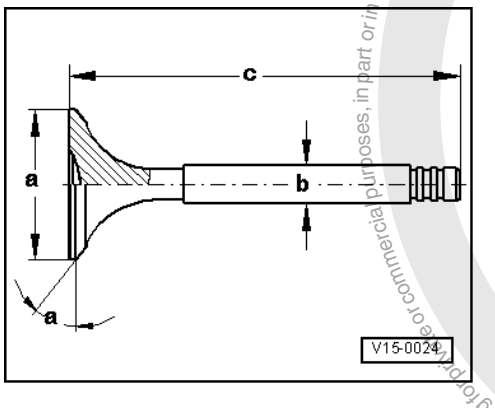

Protected by copyright. Copying for private or commercial purposes, in part or in whole, is not permitted unless authorised by Volkswagen AG. Volkswagen AG does not guarantee or accept any liability with respect to the correctness of information in this document. Copyright by Volkswagen AG.
satelettronica

-> Fig. 5 Valve dimensions

Note:

Valves must not be reworked. Only lapping-in is permitted.

Dimension		Inlet valve	Exhaust valve
øa	mm	29.5	26.0
øb	mm	5.973	5.953
c	mm	100.9	100.5
α	<°	45	45

2.2 - Reworking valve seats

Special tools, workshop equipment, testers, measuring instruments and auxiliary items required

- Depth gauge
- Valve seat refacing tool

Notes:

- When repairing engines with leaking valves, it is not sufficient to replace or renew valve seats and valves. It is also necessary to check the valve guides for wear. This particularly important on high mileage engines => Page 81 .
- The valve seats should only be reworked just enough to produce a perfect seating pattern. The maximum permissible reworking dimension must be calculated before reworking commences. If the reworking dimension is exceeded, the function of the hydraulic tappets can no longer be guaranteed and the cylinder head should be renewed.

The max. permissible reworking dimension is calculated as follows:

- Insert valve and press firmly against seat.

Note:

If the valve is to be renewed as part of a repair, use a new valve for the calculation.

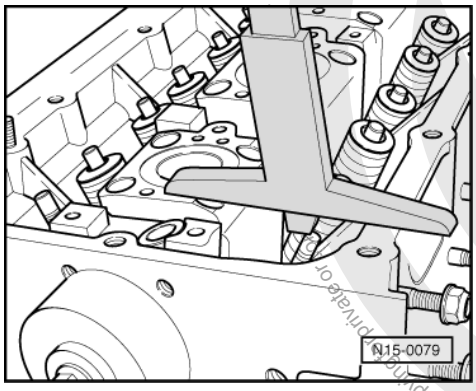

- -> Measure distance between end of valve stem and upper edge of cylinder head.
- Calculate max. permissible reworking dimension from measured distance and minimum dimension.

Minimum dimension:
Inlet valve 7.6 mm
Exhaust valve 7.6 mm

Measured distance minus minimum dimension

satelettronica

= max. permissible reworking dimension.

Example:

-	Measured distance	8.0	mm
	Minimum dimension	7.6	mm
=	max. perm. rework dimension*	0.4	mm

*) The max. permissible reworking dimension is shown on illustrations for reworking valve seats as dimension "b".

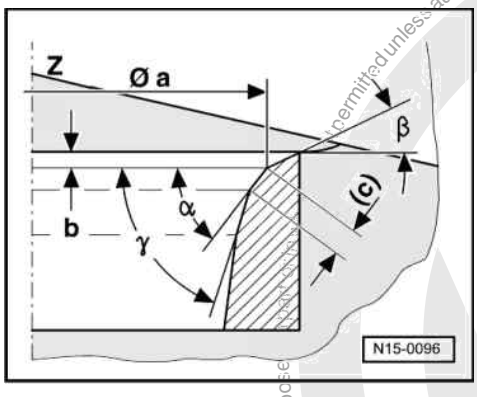

-> Reworking inlet valve seat

a = 28.7 mm ø
b = Max. permissible reworking dimension*
c = 1.5...1.8 mm
Z = Cylinder head lower edge
α = 45 °valve seat angle
β = 30 °upper correction angle
γ = 60 °lower correction angle

Reworking exhaust valve seat

a = ø25.0 mm
b = Max. permissible reworking dimension*
c = approx. 1.8 mm
Z = Cylinder head lower edge
α = 45 °valve seat angle
β = 30 °upper correction angle
γ = 60 °lower correction angle

*) Calculating max. permissible reworking dimension => Page 77 .

Protected by copyright. Copying for private or commercial purposes, in part, is not permitted unless authorised by Volkswagen AG. Volkswagen AG does not guarantee or accept any liability with respect to the correctness of information in this document. Copyright by Volkswagen AG.
satelettronica

2.3 - Replacing camshaft oil seals

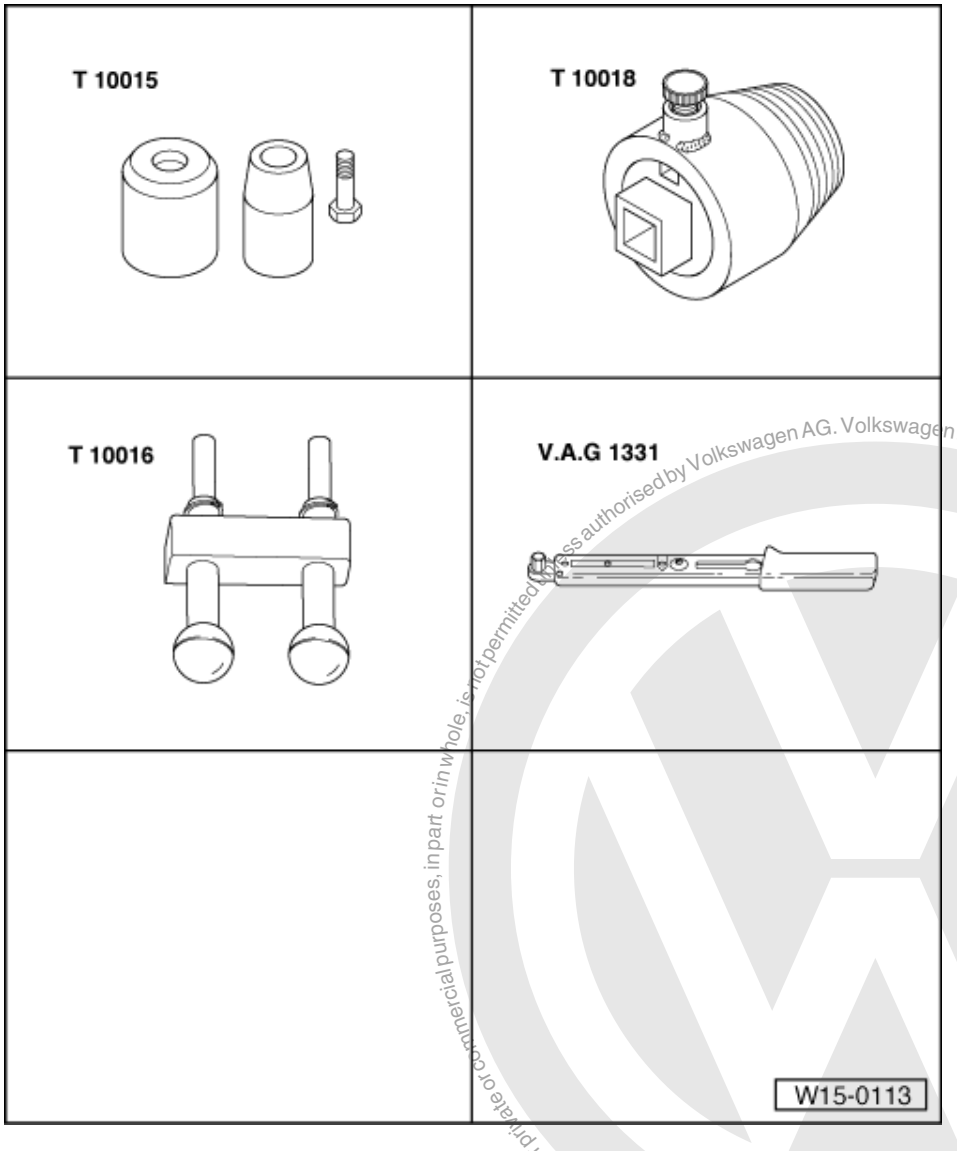

Protected by copyright. Copying for private or commercial purposes, in part or in whole, is not permitted unless authorised by Volkswagen AG. Volkswagen AG does not guarantee or accept any liability with respect to the correctness of information in this document. Copyright by Volkswagen AG.
satelettronica

Special tools, workshop equipment, test and measuring appliances and auxiliary items required

- T 10015 Puller
- T 10018 Seal extractor
- T 10016 Camshaft locking device
- V.A.G 1331 Torque wrench (5...50 Nm)

Removing

- First remove both toothed belts
  => Page 24 .
- Turn crankshaft back slightly.

Note:

The camshaft sprockets must be locked into the camshaft housing fitting holes by bolt pins of locking device T 10016.

- Remove camshaft sprockets. Hold camshaft sprockets with locking device T 100 16 to loosen bolts.

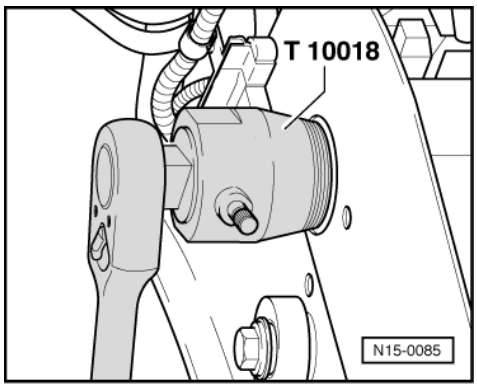

- Unscrew inner part of oil seal extractor T 10018 two turns (approx. 3 mm) out of the outer part and lock in position with knurled screw.
- Oil threaded head of oil seal extractor.
- -> Screw puller T 10018 forcibly as far as possible into oil seal.
- Loosen knurled screw and turn inner part of extractor against camshaft until oil seal has been extracted.

Installing

- Lightly oil sealing lip of oil seal.

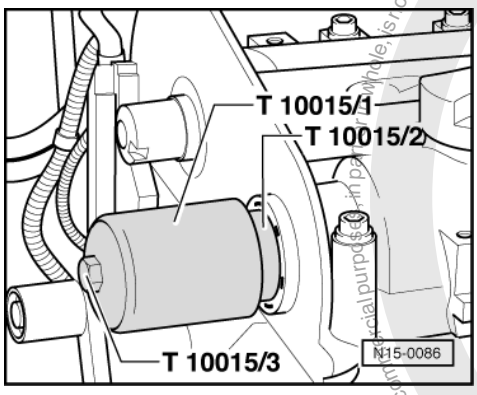

- -> Place the guide sleeve T 10015/2 onto the camshaft journal.
- Slide oil seal over the guide sleeve.
- Press oil seal in onto stop with press sleeve T 10015/1 and bolt T 10015/3.
- Fit camshaft sprockets.

Note:

Observe position of camshaft sprockets to camshaft keyways.

- Hold the respective camshaft sprocket with locking device T 10016 and tighten new bolts to
  20 Nm
  and then turn bolt
  1/4 turn (90°) further.

When installing toothed belt => Page 24 .

The rest of the assembly is basically a reverse of the dismantling sequence.

Protected by copyright. Copyright by Volkswagen AG. Copying for private or commercial purposes, in part or whole, is not permitted unless authorised by Volkswagen AG. Volkswagen AG does not guarantee or accept any liability with respect to the correctness of information in this document.
satelettronica

2.4 - Checking valve guides

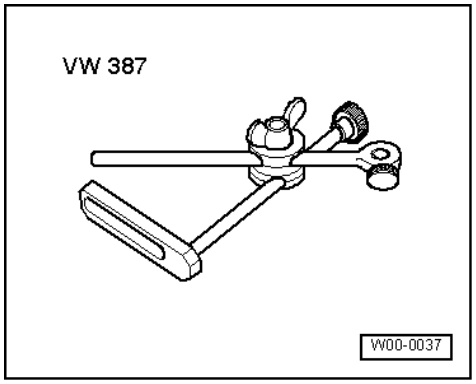

Special tools, workshop equipment, testers, measuring instruments and auxiliary items required

- VW 387 Universal dial gauge bracket
- Dial gauge

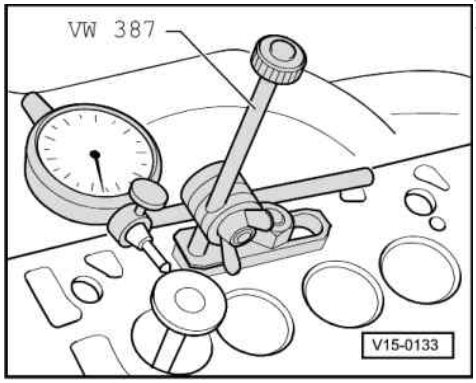

Test sequence

- -> Insert new valve into guide until end of valve stem is flush with end of guide. Due to the slight difference in stem dimensions, ensure that only an inlet valve is used in the inlet guide and an exhaust valve in the exhaust guide.
- Determine rock.
  Wear limit: 0.8 mm

2.5 - Renewing valve guides

Special tools, workshop equipment, testers, measuring instruments and auxiliary items required

- 3360 Driver
- 3363 Hand reamer and cutting fluid

Removing

- First check whether the valve seat insert rings and if necessary the cylinder head sealing surface can be reworked. If this is not the case then the valve guide should not be replaced.
- Press the worn valve guides out with drift 3360 from the camshaft side.

Protected by copyright. Copying for private or commercial purposes, in part or in whole, is not permitted unless authorised by Volkswagen AG. Volkswagen AG does not guarantee or accept any liability with respect to the correctness of information in this document. Copyright by Volkswagen AG.
satelettronica

Note:

If repair version guides are already fitted in the cylinder head, these must be pressed out from the combustion chamber side. To do this the cylinder head can be supported on the valve spring seats with sleeve VW 421 and press piece VW 447h.

Installing

- Coat the new valve guides with oil and press with drift 3360 into cold cylinder head from the camshaft side until the shoulder makes contact.

Note:

When the shoulder on guide makes contact, the pressure must not exceed 1.0 t otherwise shoulder may break off.

- Ream guides out with hand reamer 3363 using plenty of cutting fluid.
- Rework valve seats => Page 77 .

2.6 - Renewing valve stem seals

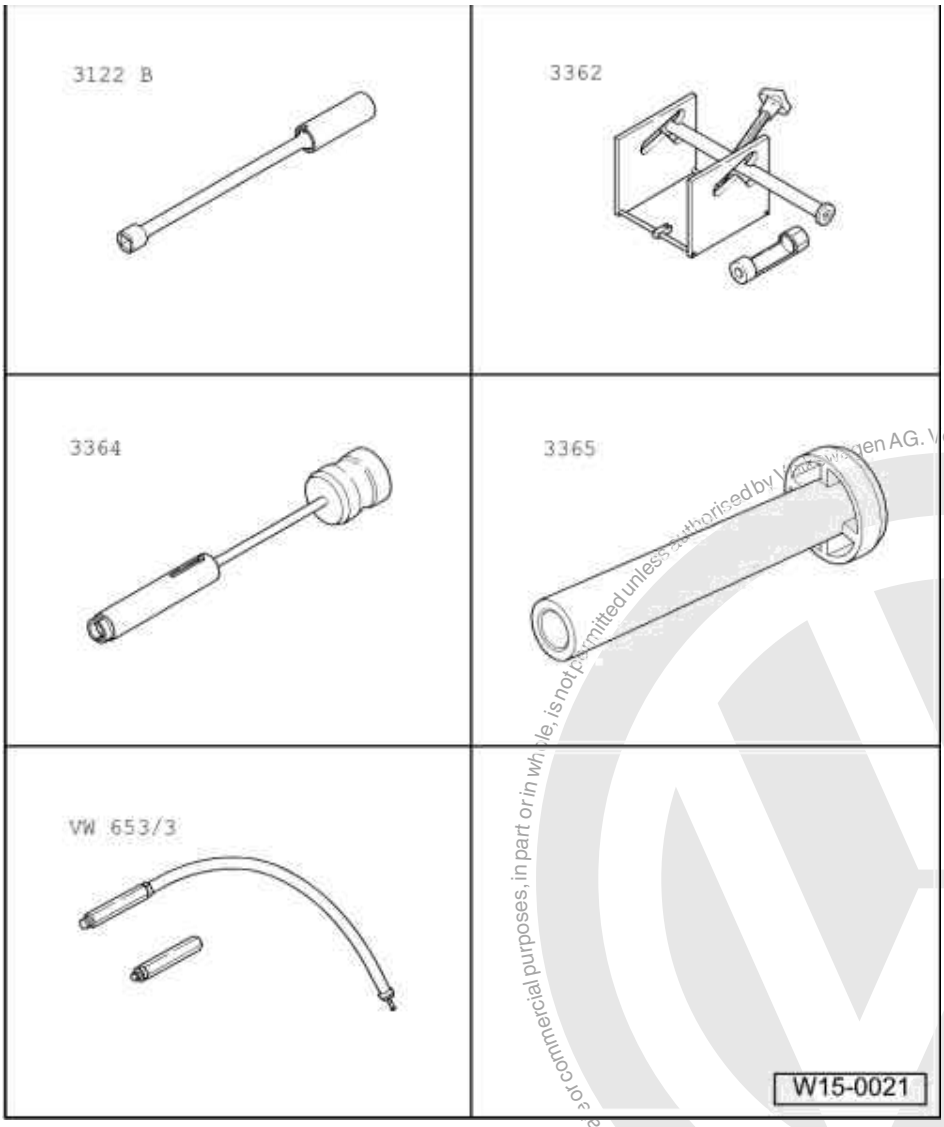

satelettronica
Protected by copyright. Copying for private or commercial purposes, in part or in whole, is not permitted unless authorised by Volkswagen AG. Volkswagen AG does not guarantee or accept any liability with respect to the correctness of information in this document. Copyright by Volkswagen AG.

Special tools, workshop equipment, test and measuring appliances and auxiliary items required

- 3122B Spark plug spanner
- 3362 Valve spring compressor with 3362/1 press piece
- 3364 Puller
- 3365 Fitting tool
- VW 653/3 Pressure hose

Removing

(with cylinder head fitted)

- First remove main drive toothed belts
  => Page 24 .
- Then remove camshaft housing
  => Page 60 .

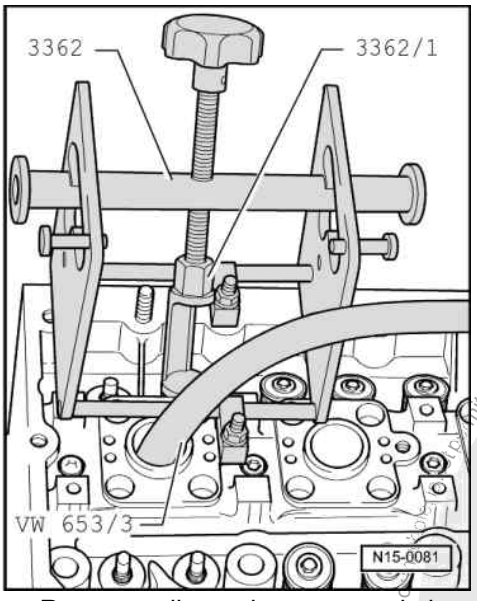

- Remove roller rocker arms and place onto a clean surface. Ensure that roller rocker arms are not interchanged.
- Remove spark plugs with spark plug spanner 3122B.
- Set piston of appropriate cylinder to "bottom dead centre".
- -> Mount fitting tool 3362 with press piece 3362/1.
- Screw pressure hose VW 653/3 into the spark plug thread.
- Connect pressure hose to compressed air system supplying
  at least 6 bar
  and remove valve springs.
- Pull off valve stem seals with puller 3364.

Installing

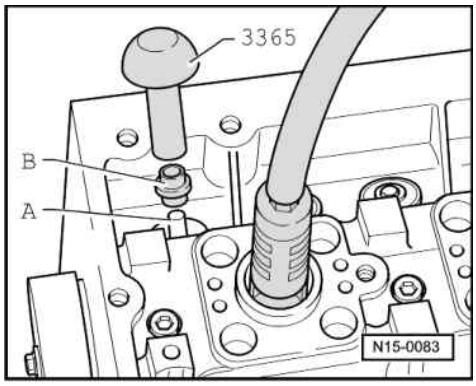

Protected by copyright. Copying for private or commercial purposes, in part or in whole, is not permitted unless authorised by Volkswagen AG. Volkswagen AG does not guarantee or accept any liability with respect to the correctness of information in this document. Copyright by Volkswagen AG.
satelettronica

- -> Place the plastic sleeve supplied on the appropriate valve stem. This will prevent the new valve stem seal being damaged.
- Place new valve stem seal in fitting tool 3365.
- Oil valve stem seal sealing lip and press carefully onto the valve guide.

Installing camshaft housing => Page 60 .

- Install toothed belt and tension => Page 24 .

The rest of the assembly is basically a reverse of the dismantling sequence.

Protected by copyright. Copying for private or commercial purposes, in part or in whole, is not permitted unless authorised by Volkswagen AG. Volkswagen AG does not guarantee or accept any liability with respect to the correctness of information in this document. Copyright by Volkswagen AG.
satelettronica

17 - Lubrication

1 - Removing and installing parts of the lubrication system

1.1 - Removing and installing parts of the lubrication system

Note:
The oil level must not be above the max. mark - danger of damaging catalyst!
Marks => Page 90 , Fig. 1 .
Checking oil pressure => Page 95
Oil system capacity1):
with oil filter 3.2 ltr.
1) Up-to-date figures:
=> Exhaust emissions test binder
Engine oil specifications:
Use engine oil to VW standard 500 00, 501 01 or 502 00. Only in exceptional cases: Multi-grade oils corresponding to API-SF or SG.

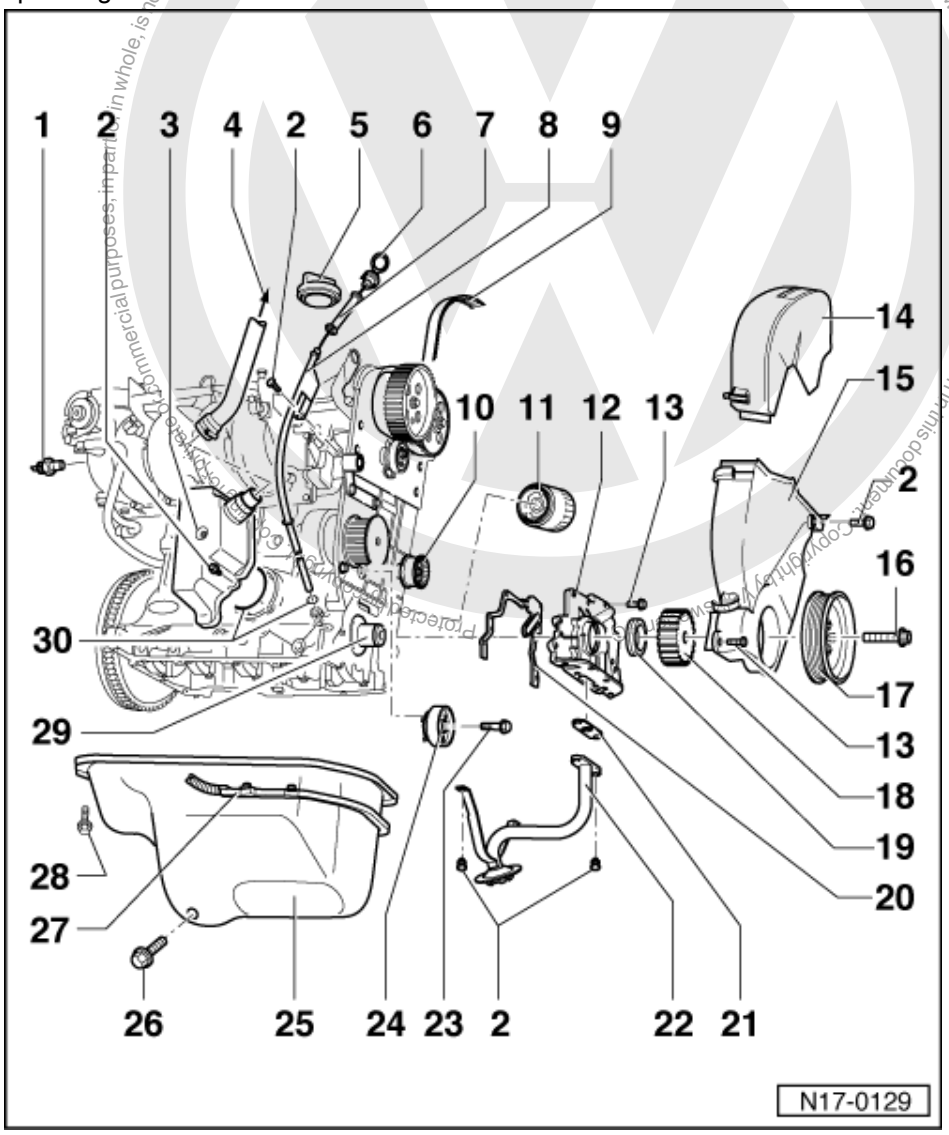

satelettronica

1 0.3...0.7 bar oil pressure switch (F1), 25 Nm
- Checking => Page 95
- If sealing ring is leaking nip open and replace.

2 10 Nm

3 Oil separator

4 To air cleaner

5 Cap
- Renew seal if damaged

6 Dipstick
- The oil level must not be above the max. mark!
- Markings => Fig. 1

7 Guide
- Pull off to extract oil

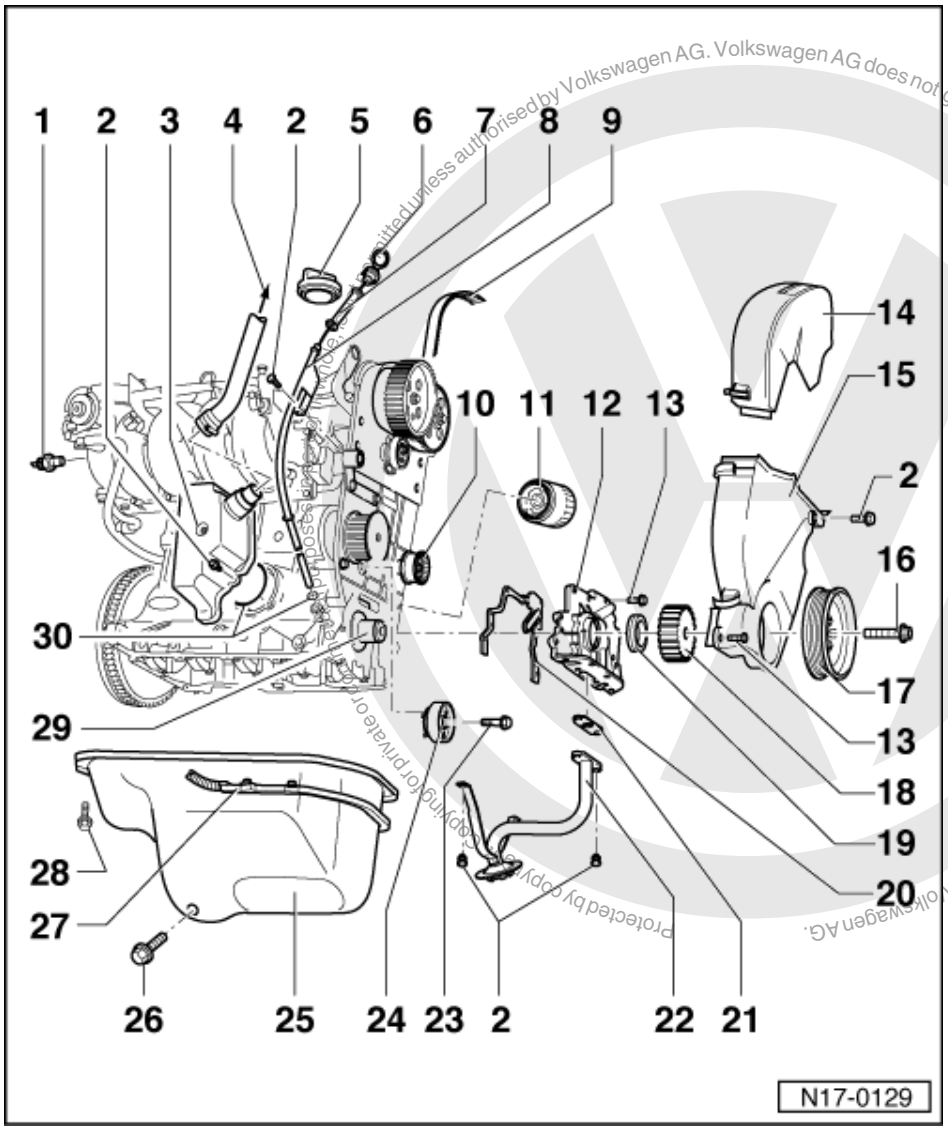

8 Guide tube

9 Main drive toothed belt
- Mark D.O.R. before removing
- Check for wear
- Do not kink
- Toothed belt routing => Page 21 , Fig. 1
- Removing, installing and tensioning

satelettronica

=> Page 24

10 Idler roller

11 Oil filter

- Loosen at hexagon bolt head
- Tighten by hand
- Observe installation instructions on oil filter

12 Oil pump

- Only renew complete
- When installing note follower on crankshaft
  => Page 89 , item 29
- Must be located on dowel sleeves
- Removing and installing
  => Page 92

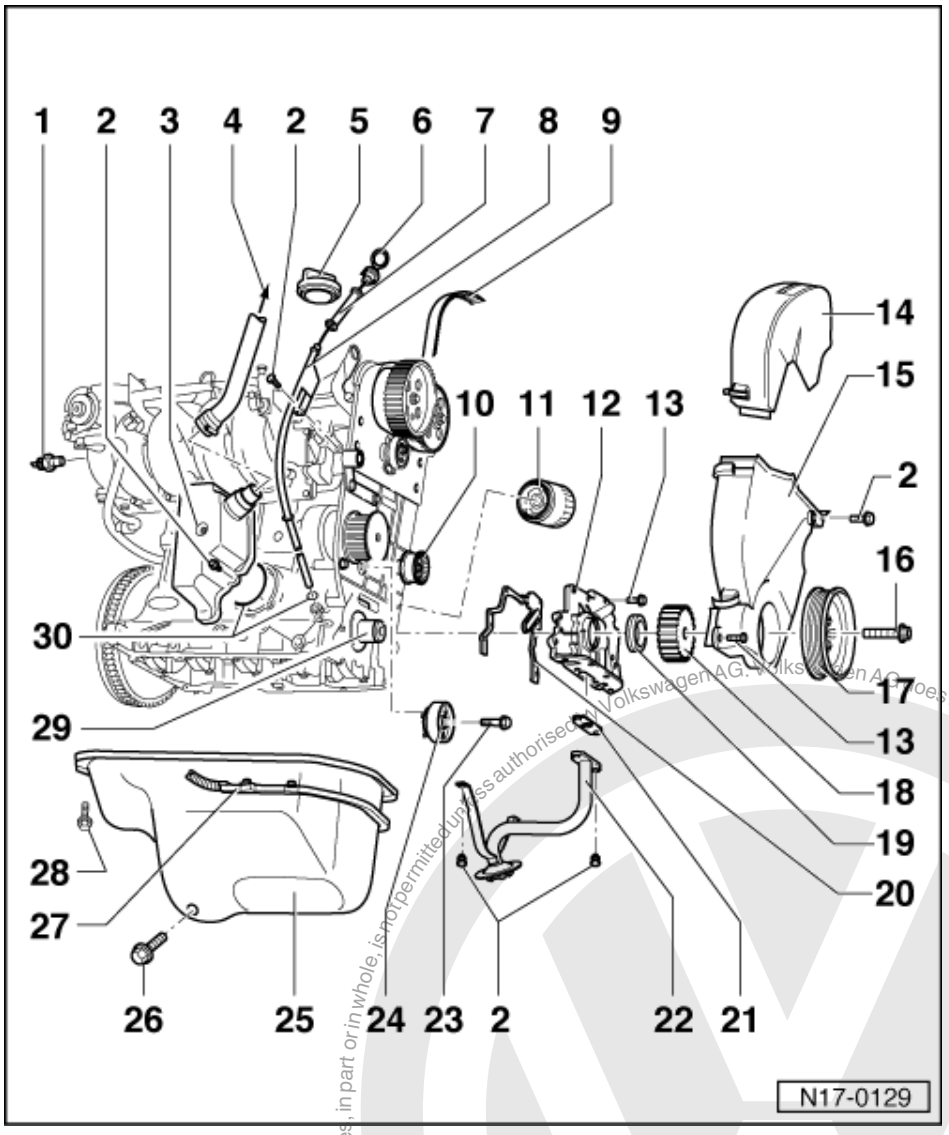

13 12 Nm

- Renew

14 Toothed belt guard - upper part

15 Toothed belt guard - lower part

16 90 Nm + 1/4 turn (90 °) further

- Renew
- Oil threads
- The turning further can be done in several stages
- The turning further angle can be measured with a commercial protractor e.g. Hazet 6690

satelettronica

17 Belt pulley
- When installing note fixing arrangement
- Removing and installing ribbed belt => Page 21

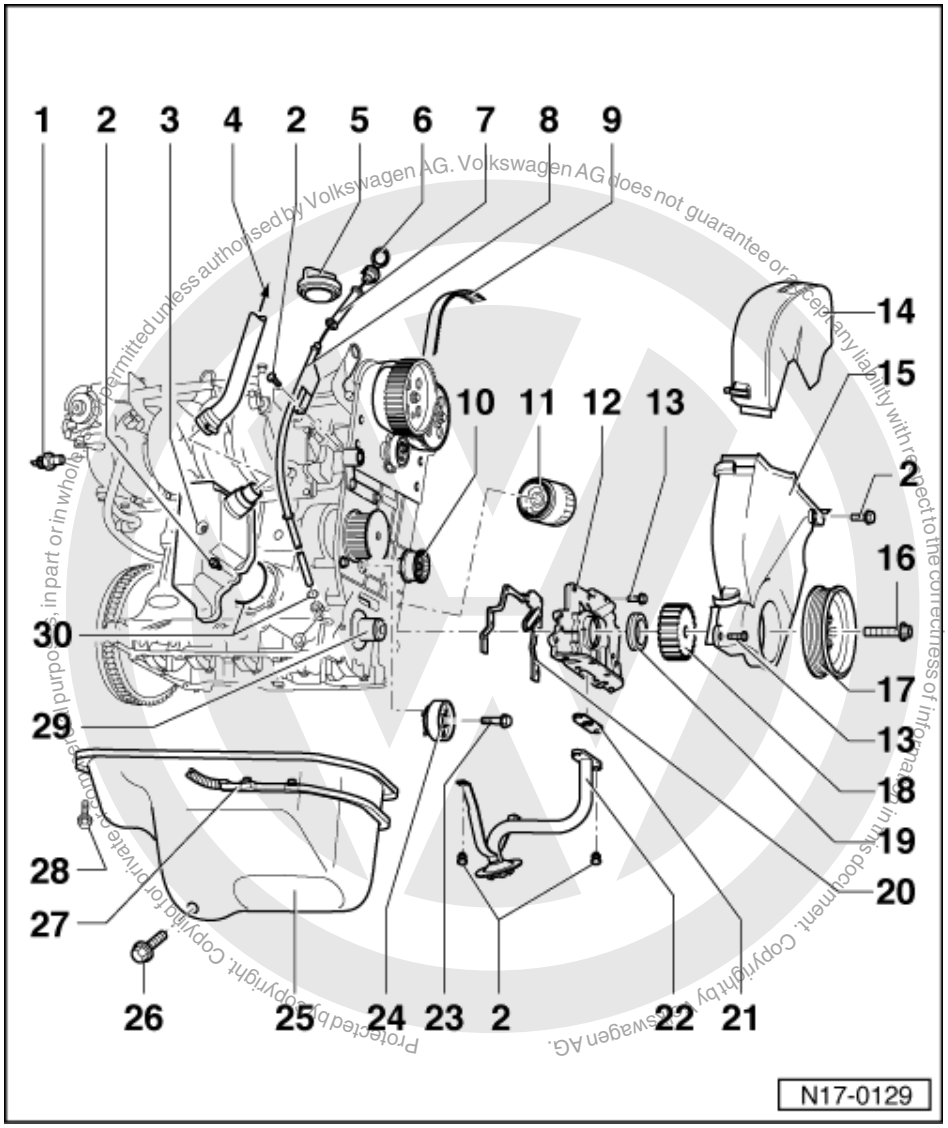

18 Crankshaft toothed belt sprocket
- When installing note fixing arrangement

19 Seal
- Renewing => Page 37

20 Gasket
- Renew
- Must be located on dowel sleeves

21 Gasket
- Renew

22 Suction pipe
- Clean strainer if soiled

23 20 Nm

24 Tensioner
- Tensioning toothed belts
  => Page 24

satelettronica

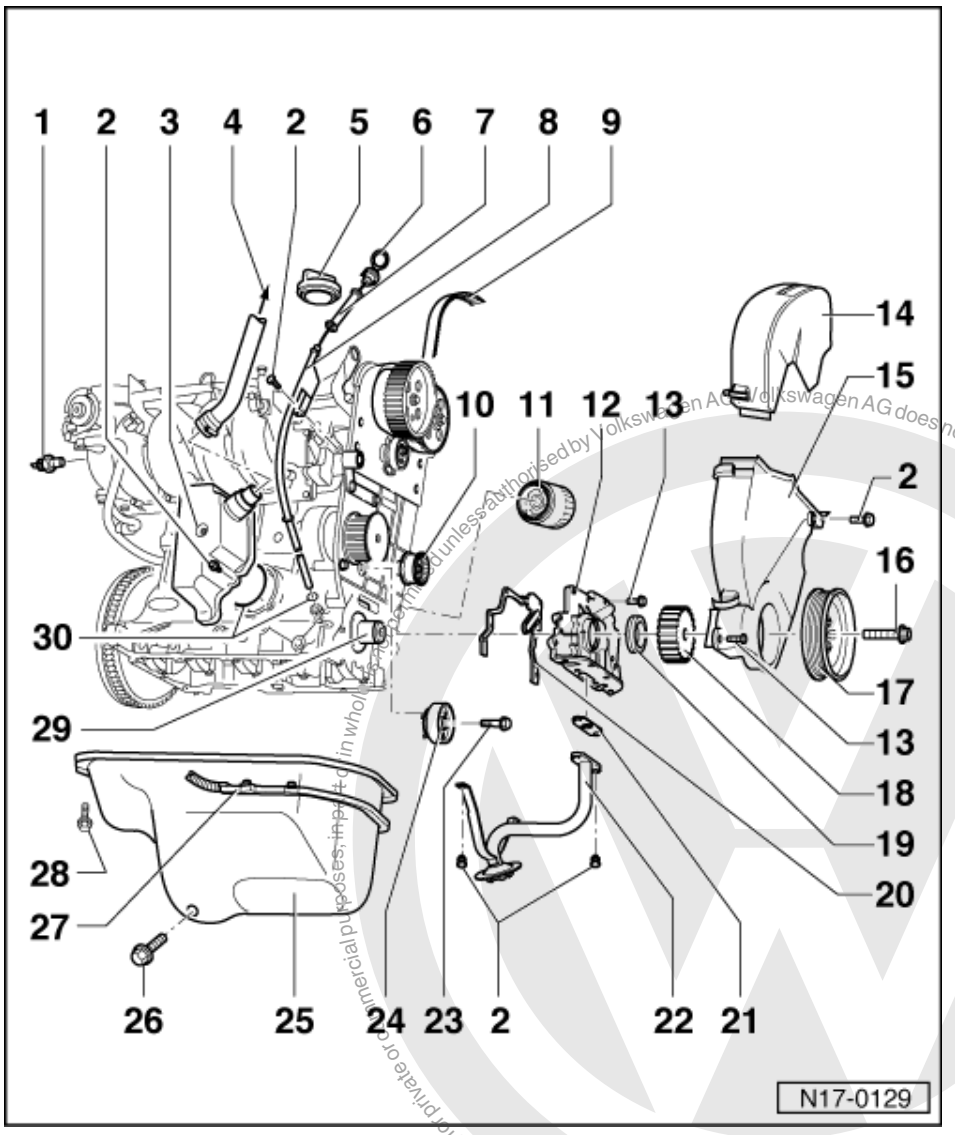

25 Sump
- Removing and installing
  => Page 90
- Clean sealing surface before installing
- Install with silicone sealant
  D 176 404 A2
  => Page 90

26 Oil drain plug, 30 Nm
- With attached seal
- Renew

27 Cable guide

28 15 Nm
- Loosen and tighten only bolts on flywheel end with socket insert T10058

29 Driver
- Coat with oil before installing oil pump

30 O-ring
- Renew

Protected by copyright. Copying for private or commercial purposes, in part or in whole, is not permitted unless authorised by Volkswagen AG. Volkswagen AG does not guarantee or accept any liability with respect to the correctness of information in this document. Copyright by Volkswagen AG.
satelettronica

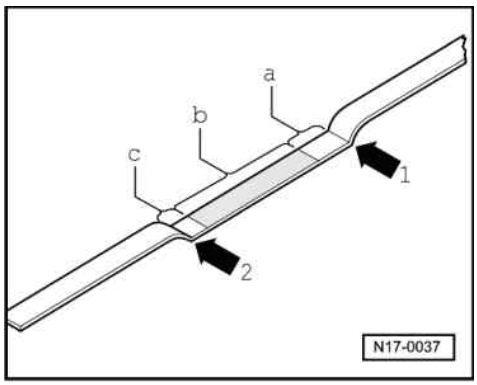

-> Fig. 1 Markings on oil dipstick

1 - max. mark
2 - min. mark
a - Area above hatched field up to max. mark: Do not replenish with engine oil!
b - Oil level within hatched field: can be replenished with engine oil
c - Area from min. mark up to hatched field: replenish with max. 0.5 ltr. of engine oil!

1.2 - Removing and installing oil sump

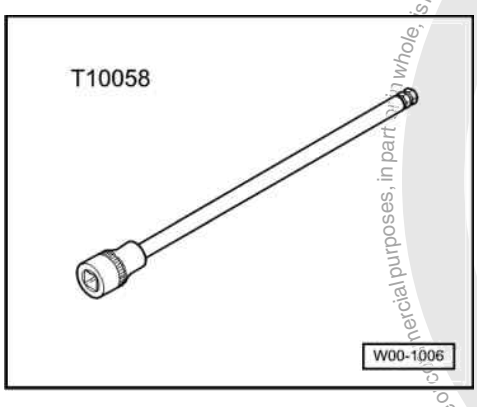

Special tools, workshop equipment, testers, measuring instruments and auxiliary items required

- T10058 Key

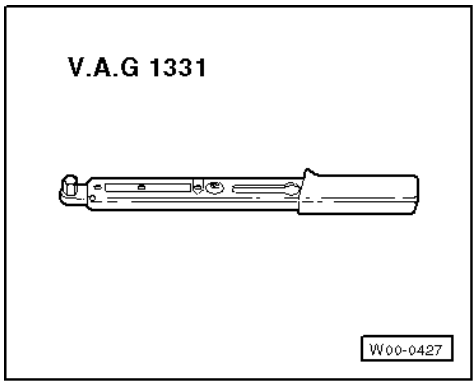

- V.A.G 1331 Torque wrench (5...50 Nm)
- Hand drill with plastic brush
- Flat scraper
- Silicone sealant D176404 A2

Protected by copyright. Copying for private or commercial purposes, in part or in whole, is not permitted unless authorised by Volkswagen AG. Volkswagen AG does not guarantee or accept any liability with respect to the correctness of information in this document. Copyright by Volkswagen AG.
satelettronica

Work sequence

- Drain engine oil.
- Remove cable guide from sump.
- Unbolt right-hand drive shaft at gearbox.

=> Running gear; Repair group 40; Servicing front suspension; Removing and installing wheel bearing, suspension strut and drive shaft Servicing front suspension Removing and installing wheel bearing, suspension strut and drive shaft

- Remove bolt from front wishbone mounting.

=> Running gear; Repair group 40; Servicing front suspension; Removing and installing wheel bearing, suspension strut and drive shaft Servicing front suspension Removing and installing wheel bearing, suspension strut and drive shaft

- Remove cover plate for flywheel.
- Unbolt sump sealed with liquid gasket.
- Remove sump, it may be necessary to release sump by tapping lightly with a rubber head hammer.
- Remove sealant residue on cylinder block with a flat scraper.

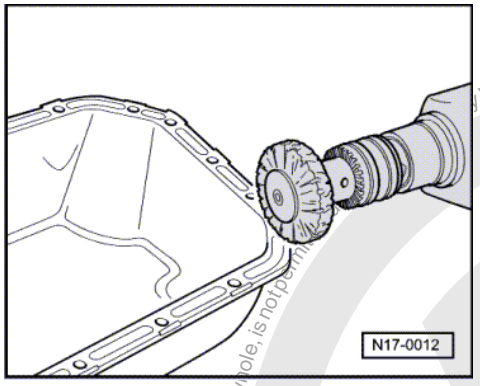

- -> Remove sealant residue on the sump with a rotating brush, e.g. a hand drill with a plastic brush (wear eye protection).
- Clean sealing surface, must be free of oil and grease.

Installing

Notes:

- Note the use by date of the sealant.
- Sump must be installed within 5 minutes of applying silicone sealing compound.
- Sump can be offered up easier and with greater security if, for guide purposes, M6 studs are inserted into the cylinder block flange at two positions.

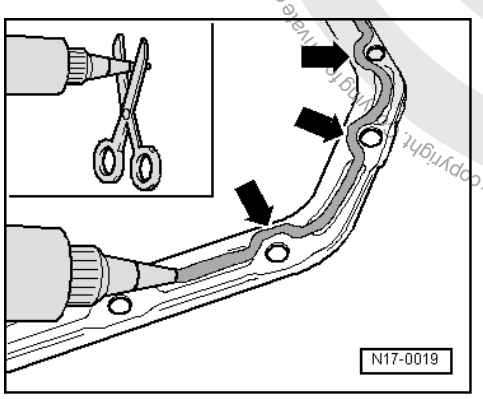

- -> Cut off tube nozzle at forward marking (nozzle approx. 3 mm ø).
- Apply silicone sealing compound, as shown, to clean sump sealing surface. Sealing compound bead must be.
  - 2...3 mm thick.

Protected by copyright. Copying for private or commercial purposes, in part or in whole, is not permitted unless authorised by Volkswagen AG. Volkswagen AG does not guarantee or accept any liability with respect to the correctness of information in this document. Copyright by Volkswagen AG.
satelettronica

- and run on inside of bolt holes -arrows-.

Note:

The sealing compound bead must not be thicker, otherwise excessive sealing compound will enter the sump and may block the oil suction pipe strainer.

- Install sump immediately and tighten all sump bolts lightly.
- Tighten sump bolts to
  15 Nm.

Note:

After installing sump the sealant must be allowed to dry for approx. 30 minutes before engine oil is replenished.

1.3 - Removing and installing oil pump

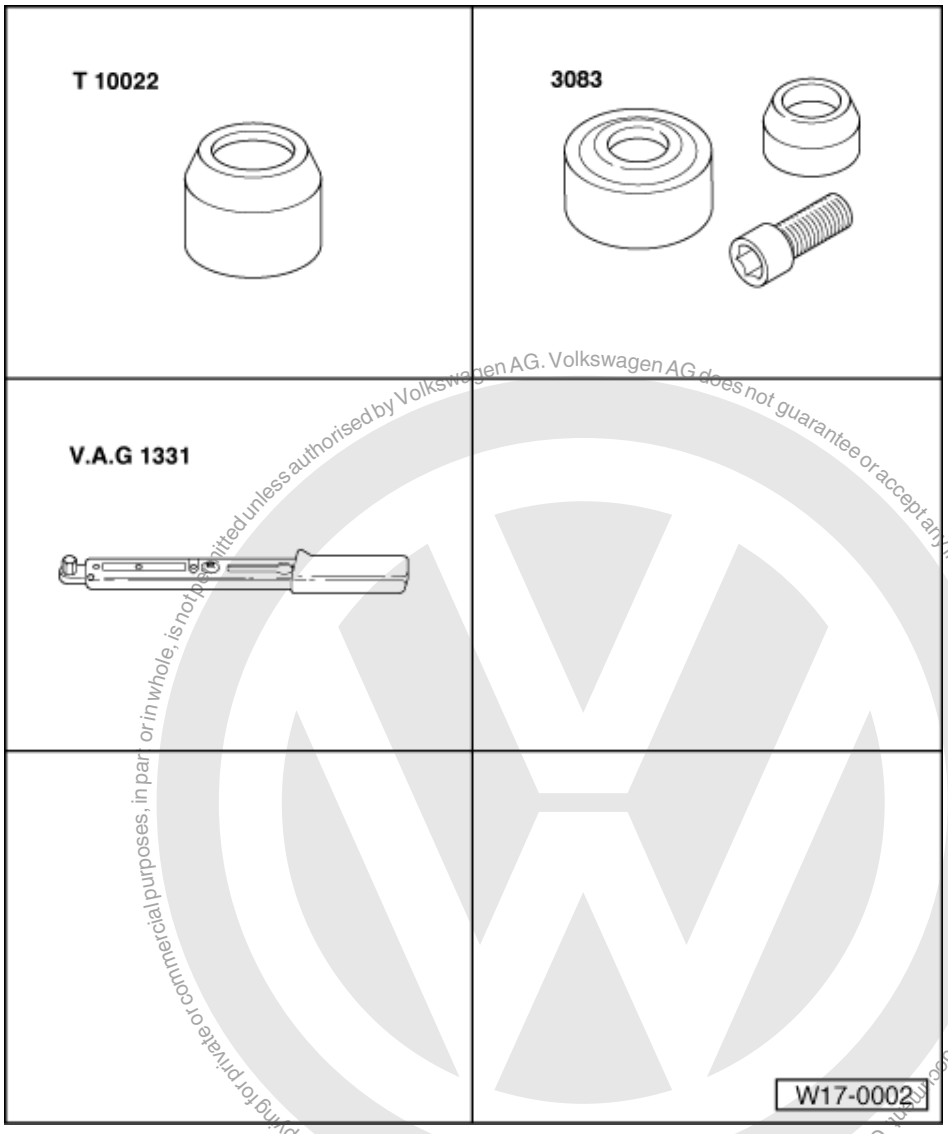

Protected by copyright. Copying for private or commercial purposes, in part or in whole, is not permitted unless authorised by Volkswagen AG. Volkswagen AG does not guarantee or accept any liability with respect to the correctness of information in this document. Copyright by Volkswagen AG.

satelettronica

Special tools, workshop equipment, test and measuring appliances and auxiliary items required

- T10022 Sleeve
- 3083 Oil seal fitting tool

- V.A.G 1331 Torque wrench (5...50 Nm)

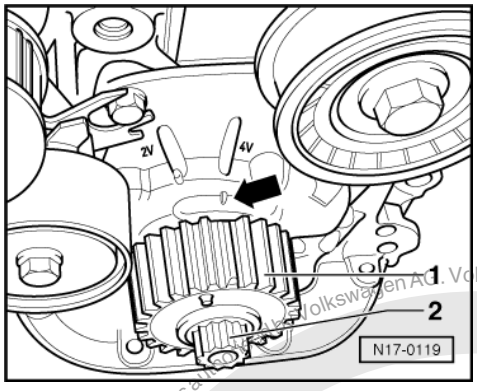

Removing

- Remove main drive toothed belt => Page 24 ; Removing, installing and tensioning toothed belt.
- -> Secure crankshaft toothed belt -1- to crankshaft with old securing bolt -2-.
- Position crankshaft at TDC No. 1 cylinder:

  The tooth ground down on the toothed belt sprocket must align with mark on the oil pump -arrow-.

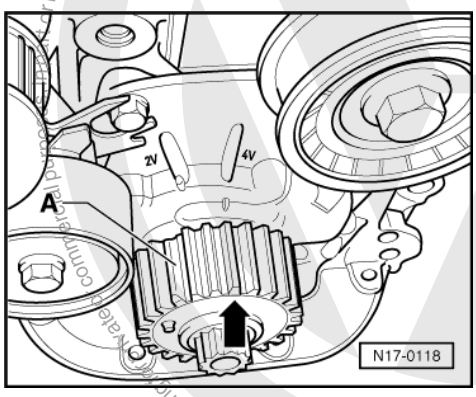

- -> Turn crankshaft/toothed belt sprocket three teeth anti-clockwise away from TDC:

  The third tooth -arrow- to the right of the tooth ground down -A- on the toothed belt sprocket must align with TDC mark on the oil pump housing.

Note:

This procedure moves the crankshaft to the correct installation position for the oil pump. One of the polygon cams on the crankshaft is uppermost.

- Remove main drive tensioning roller.
- Remove sump => Page 90 .
- Remove suction pipe => Page 88 , item 22 .
- Remove crankshaft toothed belt sprocket.
- Remove oil pump.
- Remove gasket.
- Remove sealant remnants on cylinder block with a flat scraper.
- Clean sealing surfaces, they must be oil and grease free.

satelettronica

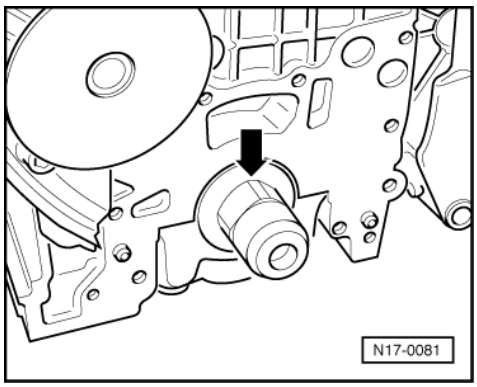

Installing

Conditions

- -> One of the polygon cams -arrow- on the crankshaft is uppermost.

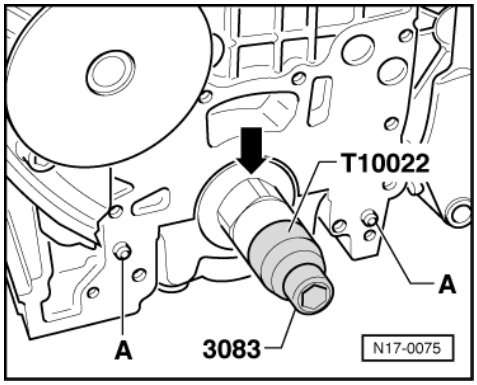

Work sequence

- -> Fit sleeve T10022 and hexagon socket head bolt from 3083 onto crankshaft and tighten hand tight.
- Fit new gasket onto guide pins -A-.

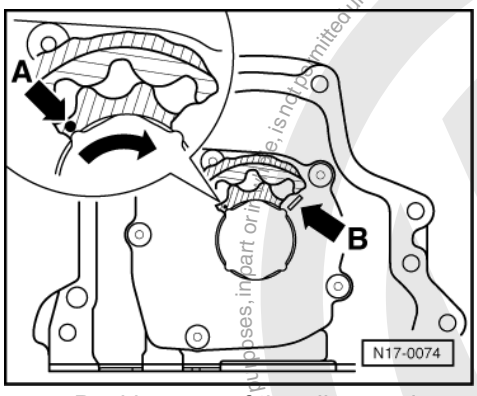

- -> Position one of the oil pump inner rotor markings arrow -A- on installation position mark arrow -B- on oil pump housing cover.
- Coat the four crankshaft polygon cams with oil.
- Lightly oil sealing lip of oil pump oil seal.
- Guide oil pump carefully onto crankshaft polygon cams.
- Align inner rotor to crankshaft polygon cams by turning slightly if necessary.
- Then slide oil pump carefully onto guide pins.
- Secure oil pump with new bolts.
  Tightening torque: 12 Nm
- Remove sleeve T10022.
- Install suction pipe => Page 88 , item 22 .
- Install sump => Page 90 .

Protected by copyright. Copyright by Volkswagen AG.
Copyright by Volkswagen AG. Volkswagen AG does not guarantee or accept any liability with respect to the correctness of information in this document.
satelettronica

- Install main drive tensioning roller, install toothed belt and tension => Page 24 , Removing, installing and tensioning toothed belt.

1.4 - Checking oil pressure and oil pressure switch

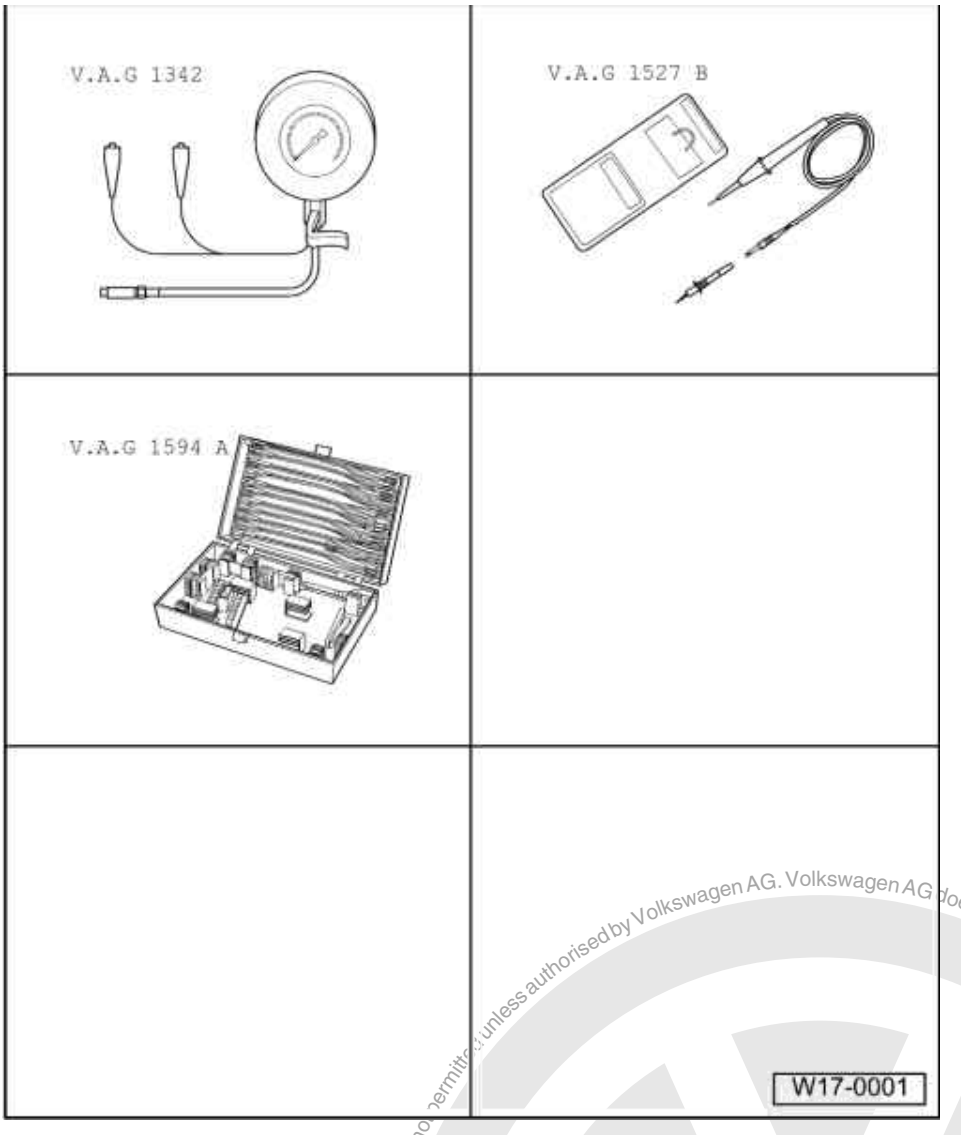

Special tools, workshop equipment, test and measuring appliances and auxiliary items required

- V.A.G 1342 Oil pressure tester
- V.A.G 1527 B Diode test lamp
- V.A.G 1594 A Adapter set

Note:

Functional check and servicing the optical and acoustic oil pressure warning:

=> Current flow diagrams, Electrical fault finding and Fitting locations binder

Protected by copyright. Copying for private or commercial purposes, in part or whole, is not permitted unless authorised by Volkswagen AG. Volkswagen AG does not guarantee or accept any liability with respect to the correctness of information in this document. Copyright by Volkswagen AG.
satelettronica

Test sequence

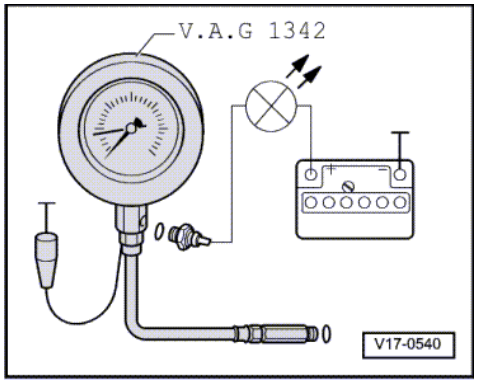

- -> Remove oil pressure switch (F1) and screw into tester.
- Screw tester into the cylinder head in place of the oil pressure switch.
- Connect brown wire of tester to earth (-).
- Connect diode test lamp V.A.G 1527 B using aux. cables from V.A.G 1594 A to battery positive (+) and oil pressure switch.
- If the LED lights up, renew oil pressure switch (F1) .

If the LED does not light up:

- Start engine and increase speed slowly.
  At
  0.3...0.7 bar
  the LED must light up, otherwise renew oil pressure switch.
- Increase engine speed further.
  At 2000 rpm and an oil temperature of 80 °C the oil pressure should be at least 2.0 bar.

At higher engine speed the oil pressure must not exceed 7.0 bar.

Protected by copyright. Copying for private or commercial purposes, in part or in whole, is not permitted unless authorised by Volkswagen AG. Volkswagen AG does not guarantee or accept any liability with respect to the correctness of information in this document. Copyright by Volkswagen AG.
satelettronica

19 - Cooling system

1 - Removing and installing parts of cooling system

1.1 - Removing and installing parts of cooling system

Notes:

- When the engine is warm the cooling system is under pressure. If necessary release pressure before commencing repair work.
- Hoses are secured with spring-type clips. In cases of repair only use spring-type clips.
- For fitting the spring-type clips, assembly tool VAS 5024 is recommended.

Perform cooling system leakage test with cooling system tester V.A.G 1274 and adapters V.A.G 1274/3 and V.A.G 1274/4.

Parts of cooling system body side =>Page 98 .

Parts of cooling system engine side => 101 .

Coolant hose connection diagram =>Page 106 .

Draining and filling with coolant=> Page 107 .

Coolant mixture ratios => Page 107 , draining and filling with coolant

Protected by copyright. Copying for private or commercial purposes, in part or in whole, is not permitted unless authorised by Volkswagen AG. Volkswagen AG does not guarantee or accept any liability with respect to the correctness of information in this document. Copyright by Volkswagen AG.
satelettronica

1.2 - Parts of cooling system body side

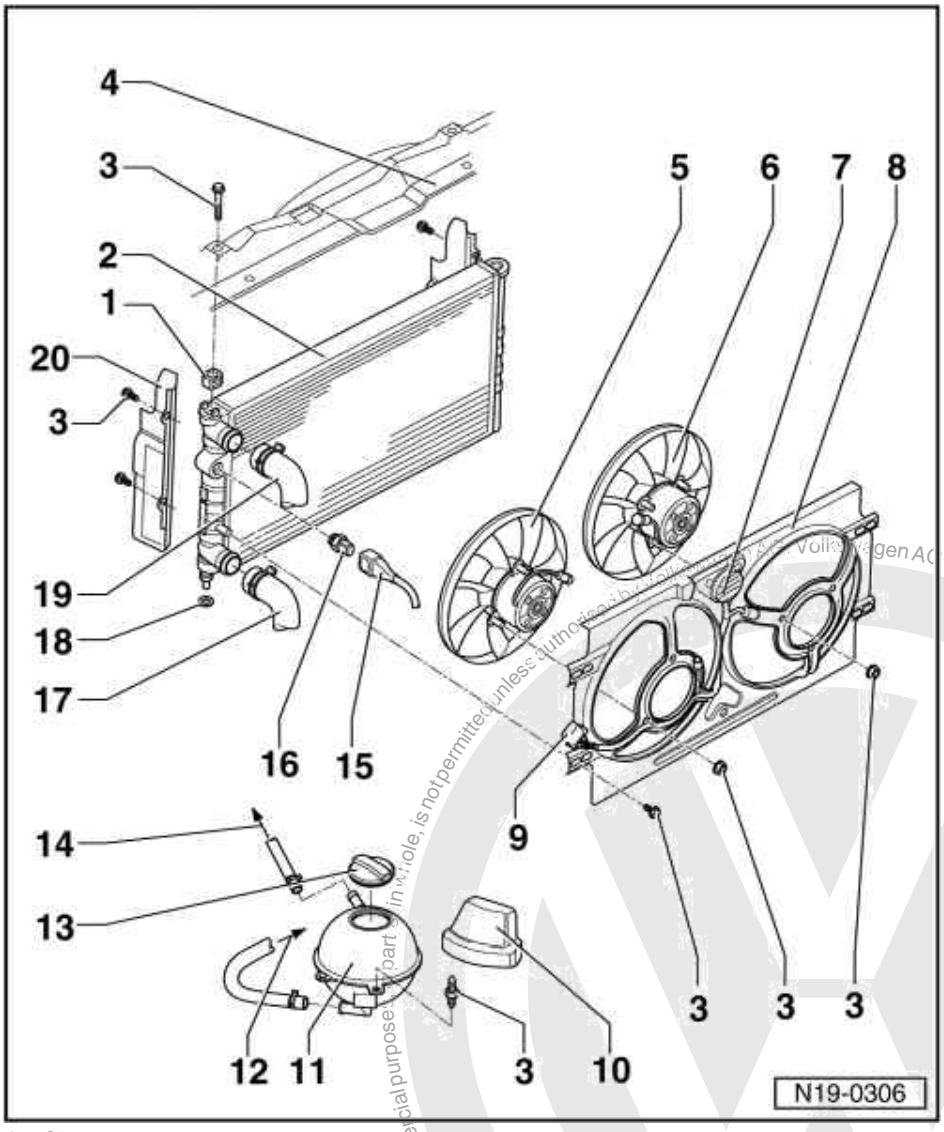

1 Clamp
2 Radiator
- Removing and installing =>Page 109
- After replacing renew entire coolant

3 8 Nm
4 Lock carrier
5 Radiator fan
6 Additional fan
- Only with optional extras

7 Series resistance
- Only with optional extras

8 Double fan ring
- Only with optional extras

Protected by copyright. Copying for private or commercial purposes, in part or in whole, is not permitted unless authorised by Volkswagen AG. Volkswagen AG does not guarantee or accept any liability with respect to the correctness of information in this document. Copyright by Volkswagen AG.
satelettronica

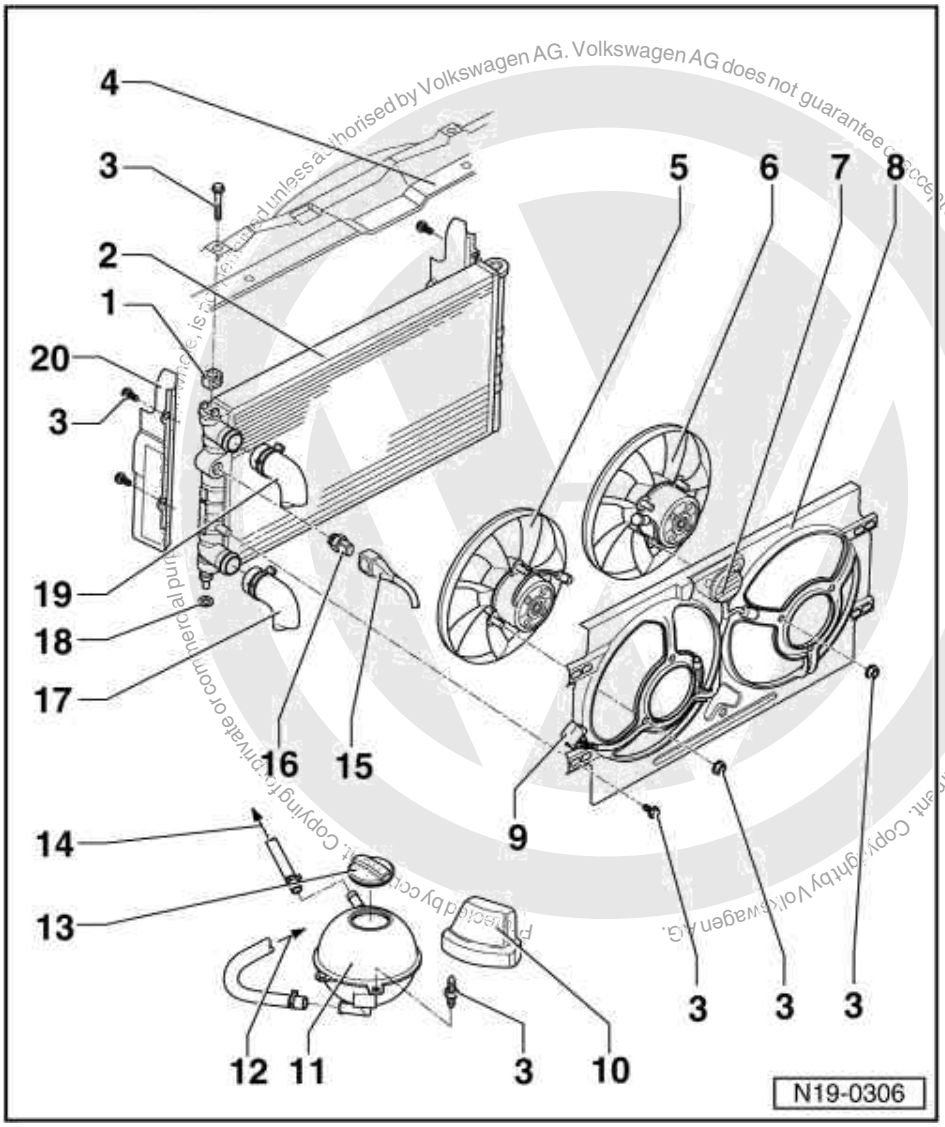

9 Connector
- For radiator fan

10 Cover

11 Expansion tank

12 To thermostat housing
- Coolant hose connection diagram =>Page 106

13 Cap
- Check with V.A.G 1274 and 1274/4
- Test pressure 1.4...1.6 bar

14 To thermostat housing
- Coolant hose connection diagram =>Page 106

15 Connector
- For radiator fan thermo-switch (F18)

satelettronica

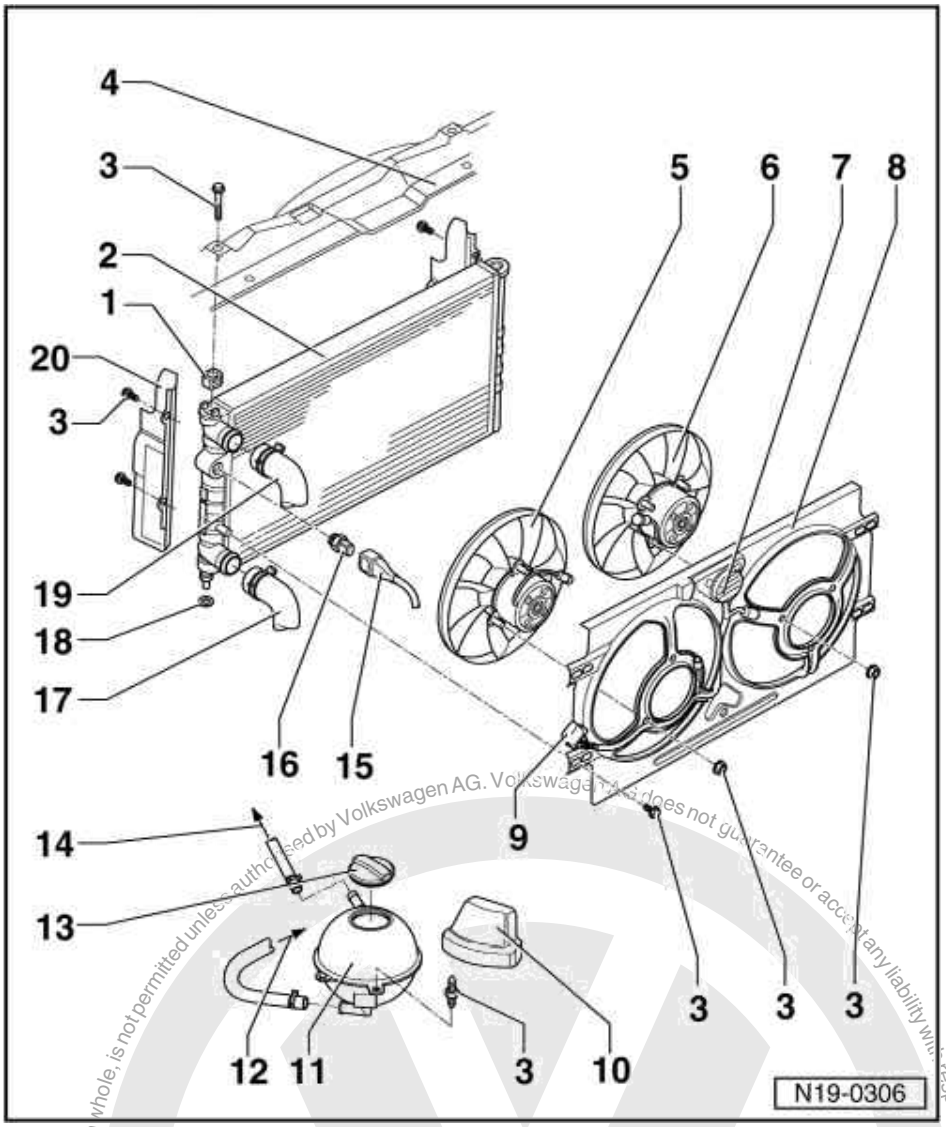

16 Thermo-switch (F18), 35 Nm

- For electric fan
- Switching temperatures:
  Stage 1
  on: 92...97 °C
  off: 84...91 °C
  Stage 2
  on: 99...105 °C
  off: 91...98 °C

17 Lower coolant hose

- Coolant hose connection diagram =>Page 106

18 Rubber washer

19 Upper coolant hose

- Coolant hose connection diagram =>Page 106

20 Air ducting

Protected by copyright. Copyright by Volkswagen AG.
Copyright by Volkswagen AG. Volkswagen AG does not guarantee or accept any liability with respect to the correctness of information in this document. Copyright by Volkswagen AG. Reproduction, in whole, is not permitted unless authorised by Volkswagen AG. Volkswagen AG does not guarantee or accept any liability with respect to the correctness of information in this document.
satelettronica

1.3 - Parts of cooling system engine side

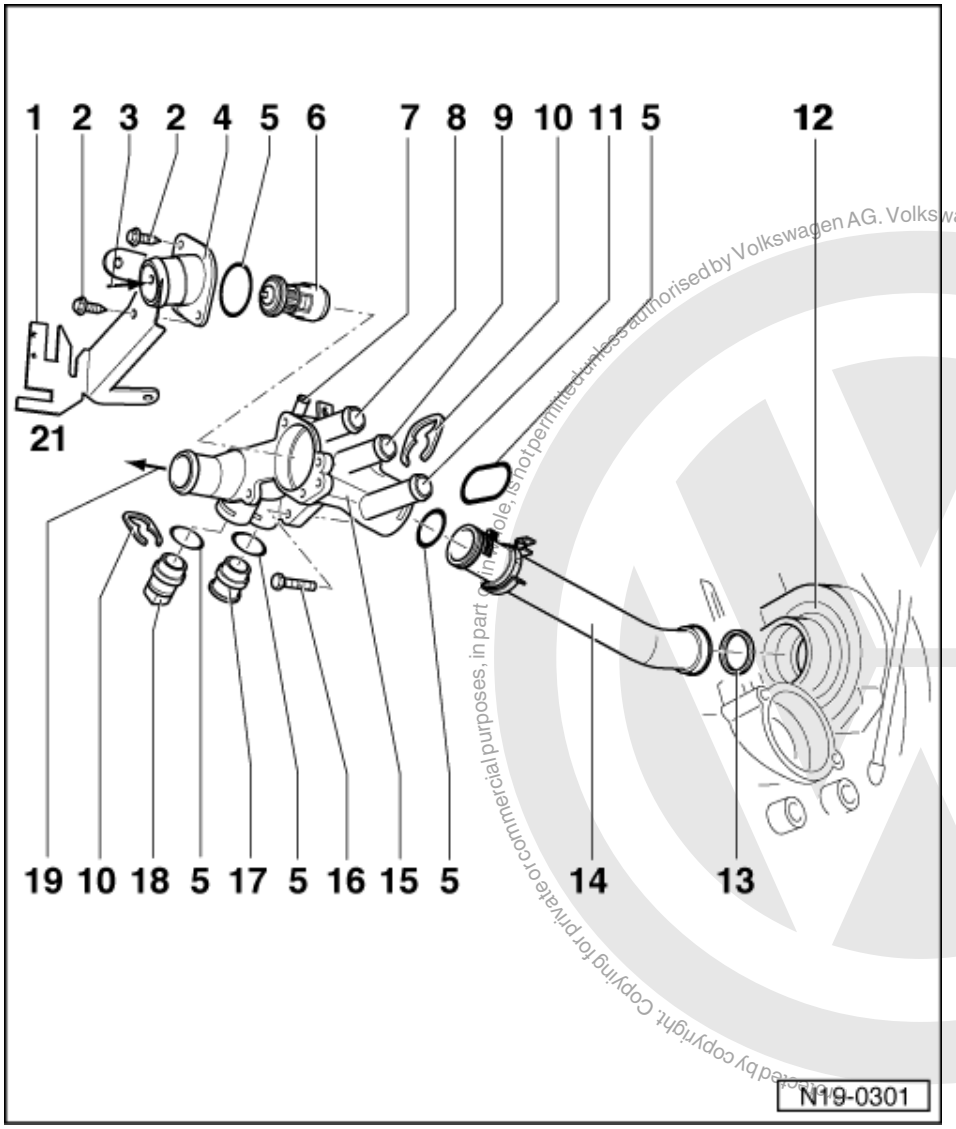

satelettronica
Copyright by Volkswagen AG. Volkswagen AG does not guarantee or accept any liability with respect to the correctness of information in this document. Copyright by Volkswagen AG. Protected by copyright. Copying for private or commercial purposes, in part or in whole, is not permitted unless authorised by Volkswagen AG.

Thermostat side

1 Retainer
- For connectors

2 Self-tapping bolt

3 From bottom of radiator
- Coolant hose connection diagram =>Page 106

4 Connection

5 O-ring
- Renew

6 Coolant thermostat
- Checking operation: heat-up thermostat in water the thermo element pin must move out
- Temperature check: Opening starts (approx. 84 °C) and ends (approx. 98 °C) cannot be checked.

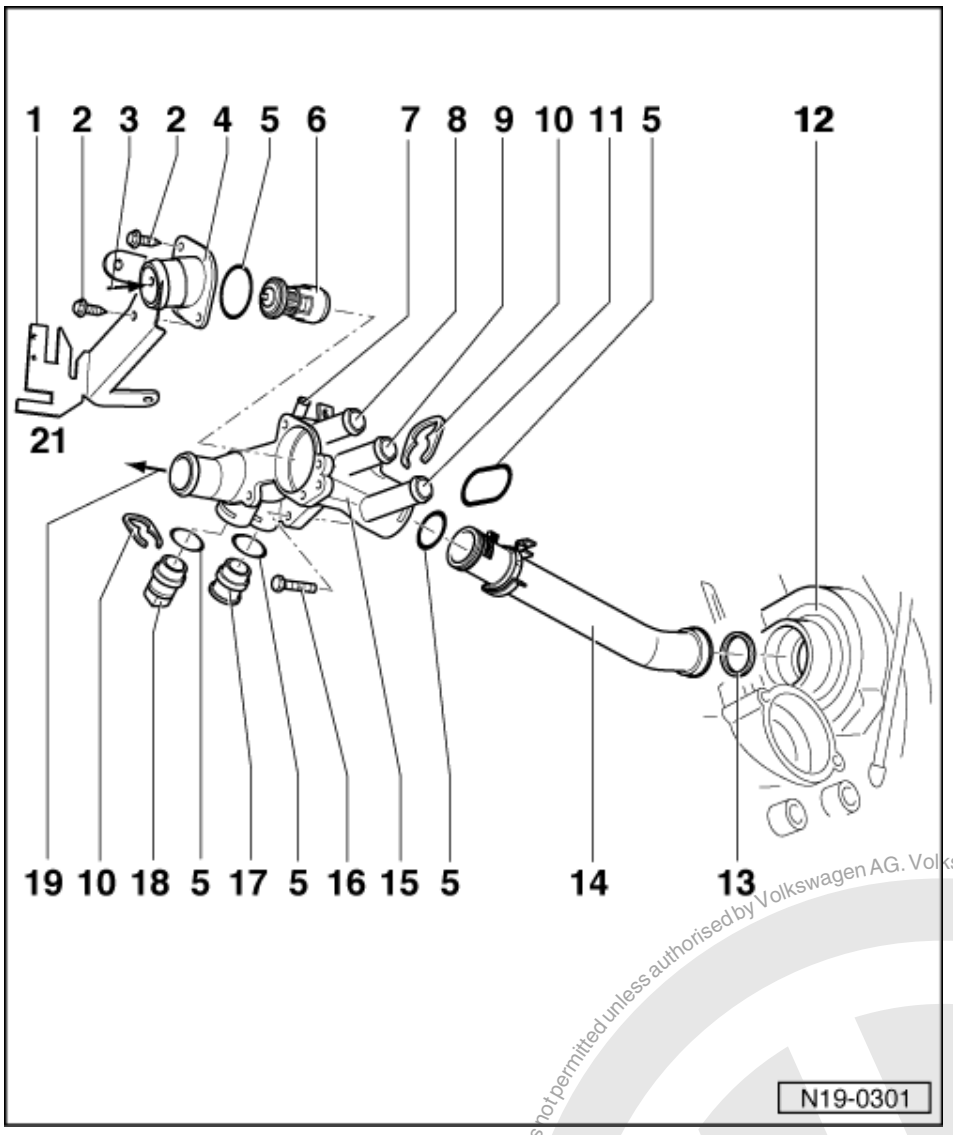

7 To top of expansion tank
8 To heat exchanger
9 From expansion tank or ATF cooler
10 Retaining clip
11 From heat exchanger
12 Coolant pump housing on cylinder block
13 Seal
- Renew

14 Coolant pipe
15 Thermostat housing
16 10 Nm

Protected by copyright. Copying for private or commercial purposes, in part or in whole, is not permitted unless authorised by Volkswagen AG. Volkswagen AG does not guarantee or accept any liability with respect to the correctness of information in this document. Copyright by Volkswagen AG.
satelettronica

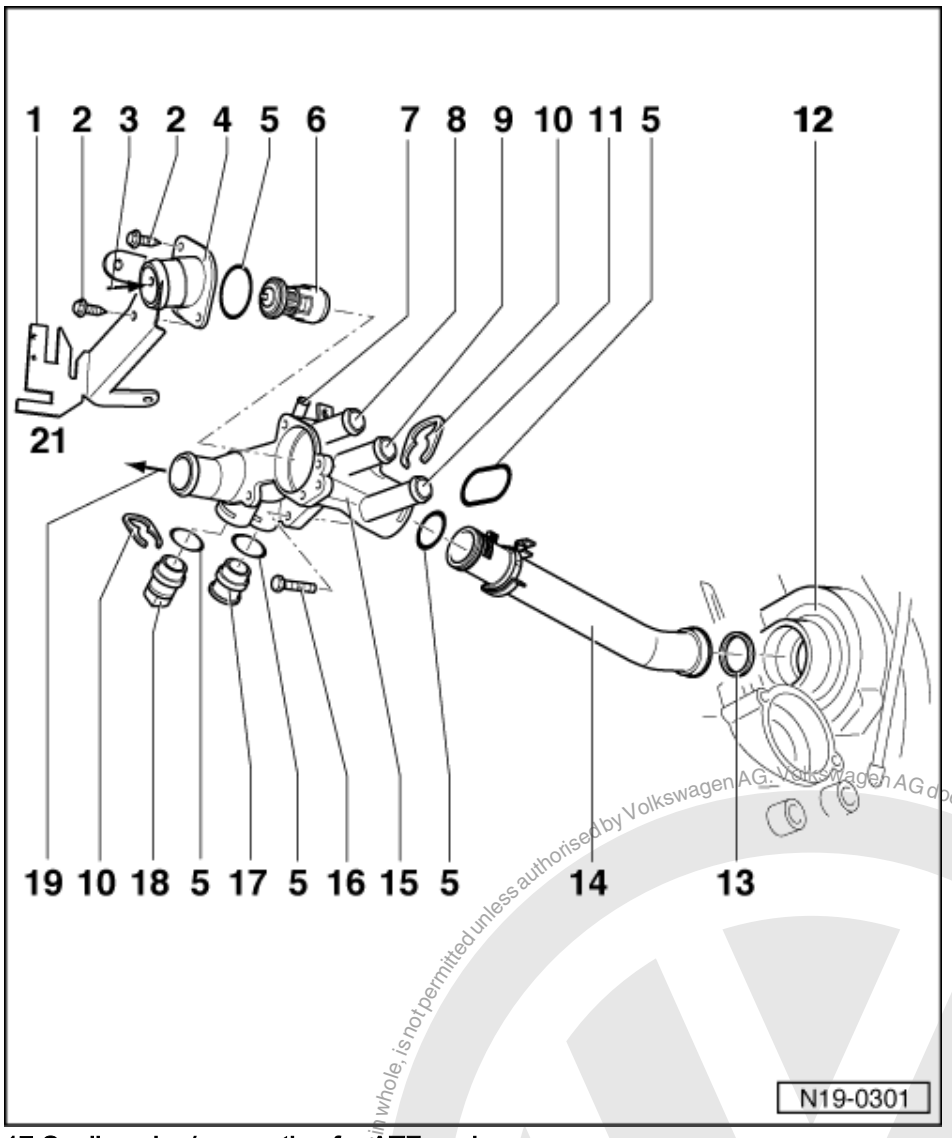

17 Sealing plug/connection for ATF cooler
18 Coolant temperature sender (G62)
- With coolant temperature gauge sender (G2)

19 To top of radiator
- Coolant hose connection diagram =>Page 106

Protected by copyright. Copying for private or commercial purposes, in part or in whole, is not permitted unless authorised by Volkswagen AG. Volkswagen AG does not guarantee or accept any liability with respect to the correctness of information in this document. Copyright by Volkswagen AG.
satelettronica

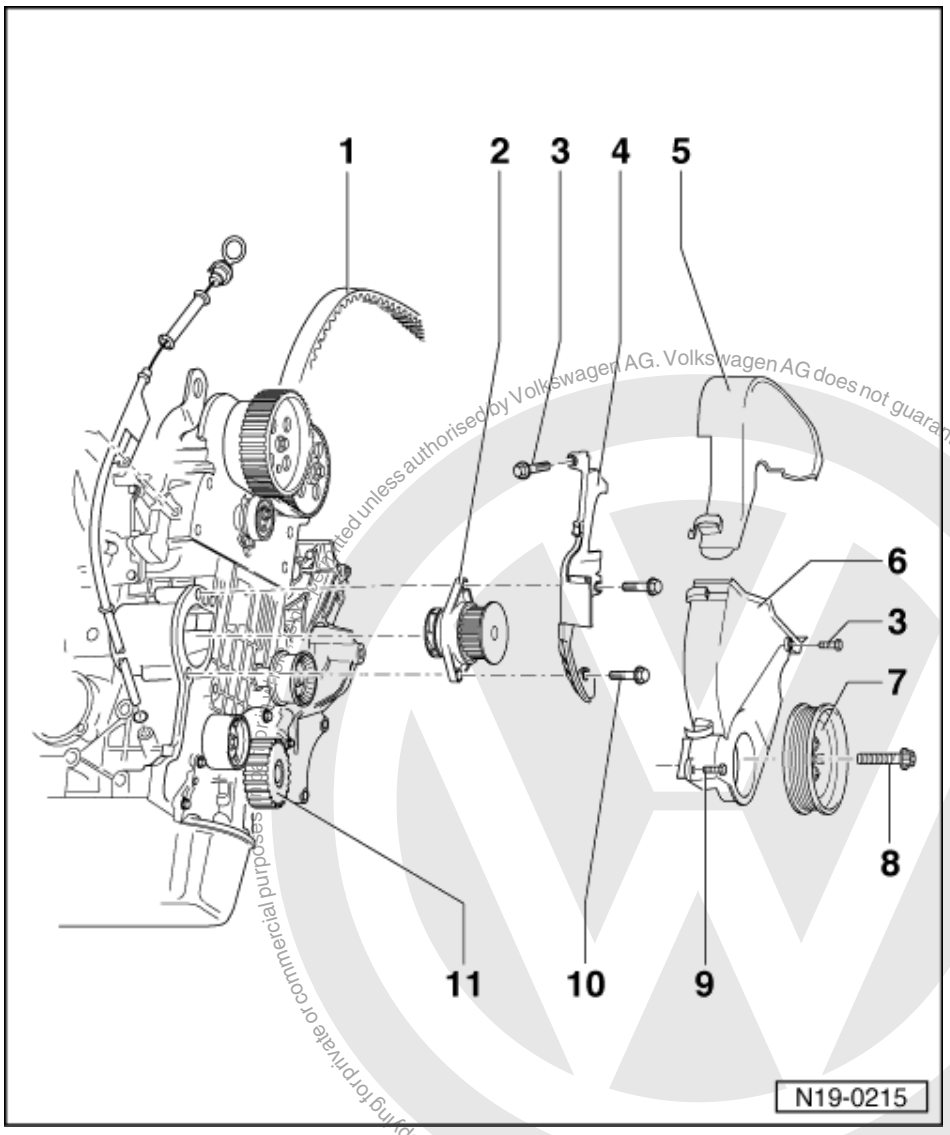

Protected by copyright. Copying for private or commercial purposes is prohibited unless authorised by Volkswagen AG. Volkswagen AG does not guarantee or accept any liability with respect to the correctness of information in this document. Copyright by Volkswagen AG.

satelettronica

Coolant pump side

1 Main drive toothed belt
- Mark D.O.R. before removing
- Check for wear
- Do not kink
- Toothed belt routing => Page 21 , Fig. 1
- Removing, installing and tensioning => Page 24

2 Coolant pump
- Check for ease of movement
- If damaged or leaking renew complete
- Removing and installing => Page 111

3 10 Nm

4 Rear toothed belt guard

5 Toothed belt guard - upper part

6 Toothed belt guard - lower part

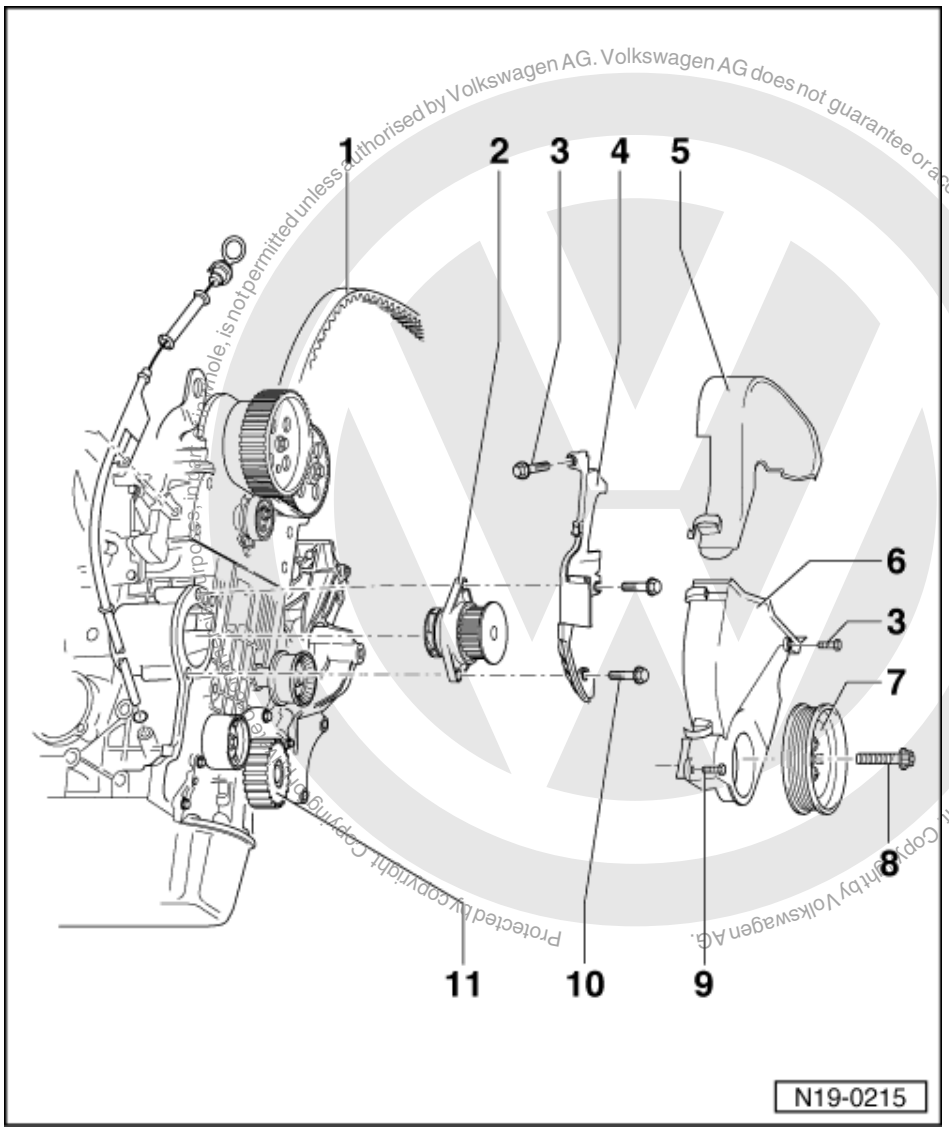

Protected by copyright. Copyright by Volkswagen AG.
Reproduction of this document or parts thereof, in whole, is not permitted unless authorised by Volkswagen AG. Volkswagen AG does not guarantee or accept any liability with respect to the correctness of information in this document.

7 Belt pulley
- When installing note fixing arrangement
- Removing and installing ribbed belt => Page 21

8 90 Nm + 1/4 turn (90 °) further
- Renew
- Oil threads
- The turning further can be done in several stages
- The turning further angle can be checked with a commercial protractor e.g. Hazet 6690

9 12 Nm
- Renew

10 20 Nm

11 Crankshaft toothed belt sprocket
- When installing note fixing arrangement

satelettronica

1.4 - Coolant hose connection diagram

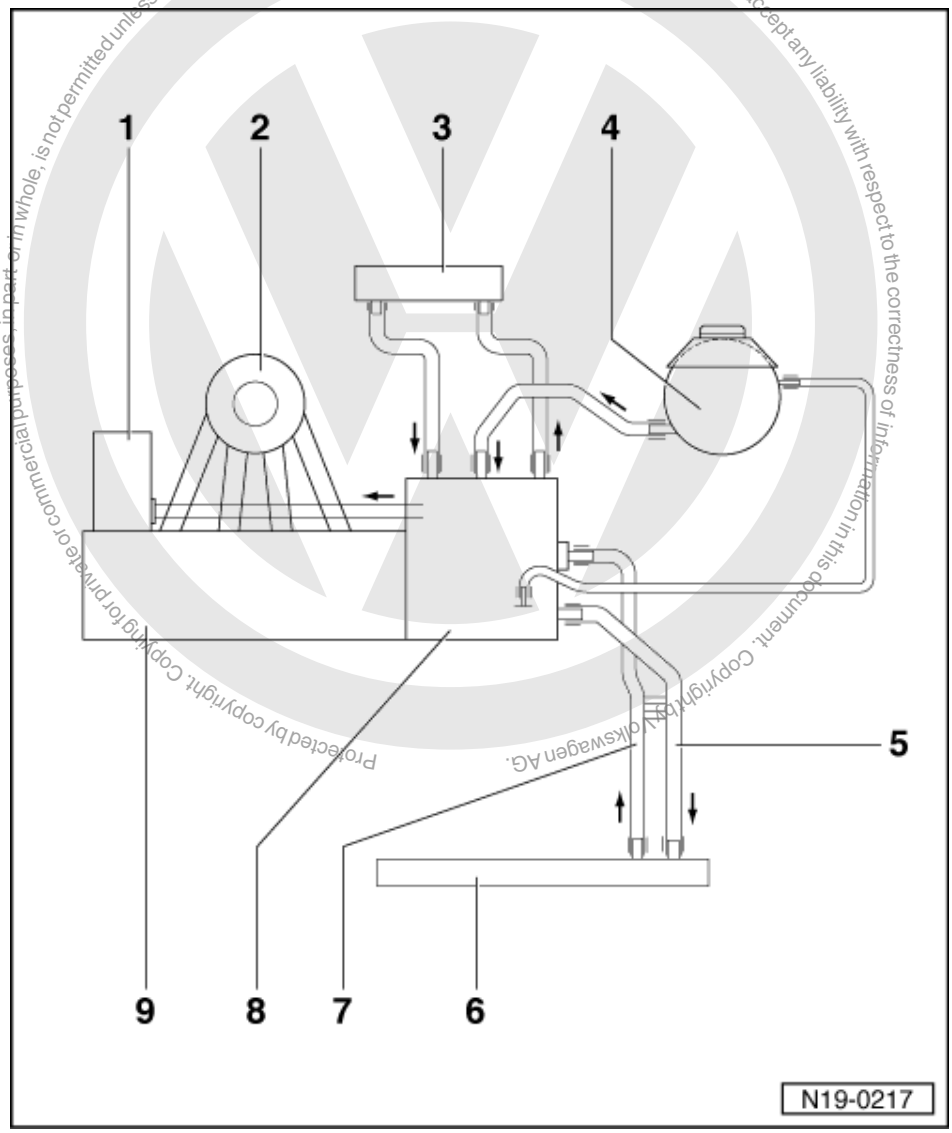

1 Coolant pump
2 Intake manifold
3 Heating system heat exchanger
4 Expansion tank
5 Upper coolant hose
6 Radiator
7 Lower coolant hose
8 Thermostat housing
9 Cylinder block

satelettronica

1.5 - Draining and filling cooling system

Special tools, workshop equipment, testers, measuring instruments and auxiliary items required

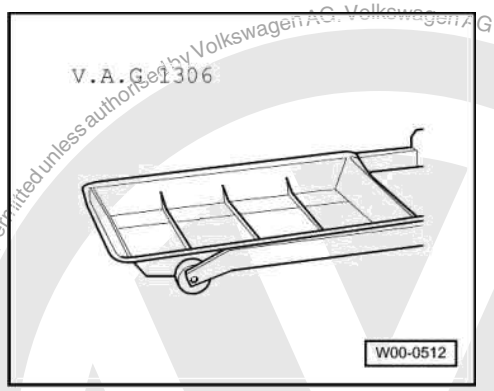

- V.A.G 1306 Drip tray

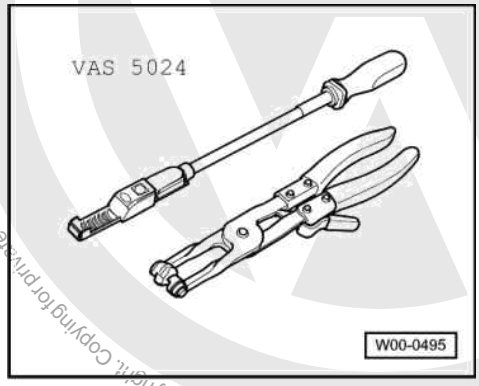

- VAS 5024 Assembly tool for spring-type clips
- Anti-freeze tester

Protected by copyright. Copying for private or commercial purposes, in part or in whole, is not permitted unless authorised by Volkswagen AG. Volkswagen AG does not guarantee or accept any liability with respect to the correctness of information in this document. Copyright by Volkswagen AG.

Draining

- Remove cap from coolant expansion tank.
- Drain coolant from bottom radiator hose.

Note:

Observe disposal regulations!

Filling

Notes:

- Only use coolant additive G 12 in accordance with TL VW 774 F.
  Distinguishing feature: coloured violet
- G 12 violet (in accordance with TL VW 774 F) can be mixed with the previous coolant additive G 12 red!
- G 12 and coolant additives marked "In accordance with TL VW 774 F" prevent frost and corrosion damage, scaling and also raise boiling point of coolant. For this reason the system must be filled all year round with frost and corrosion protection additives.

- Because of its high boiling point, the coolant improves engine reliability under heavy loads, particularly in countries with tropical climates.
- Protection against frost must be assured to about -25 °C (in arctic climatic countries to about -35 °C).
- The coolant concentration must not be reduced by adding water even in warmer seasons and in warmer countries. The anti-freeze ratio must be at least 40 %.
- If for climatic reasons a greater frost protection is required, the amount of G 12 can be increased, but only up to 60 % (frost protection to about -40 °C), as otherwise frost protection is reduced again and cooling effectiveness is also reduced.

satelettronica

- If radiator, heat exchanger, cylinder head or cylinder head gasket is replaced, do not reuse old coolant.

Recommended mixture ratios:

Frost pro- tection to	Anti-freeze amount	G 121)	Water1)
-25 °C -35 °C	40 % 50 %	2.25 l 2.8 l	3.35 l 2.8 l

1) The quantity of coolant can vary depending upon the vehicle equipment.

With cooling system charging unit VAS 6096

- Fill coolant circuit using cooling system charging unit VAS 6096.

=> Operating instructions for cooling system charging unit VAS 6096

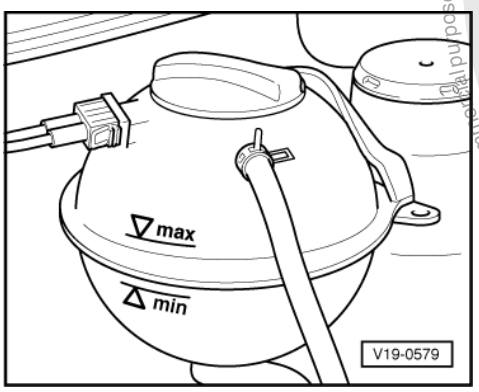

Not using cooling system charging unit VAS 6096

- -> Fill with coolant up to max. mark on expansion tank.

With and without cooling system charging unit VAS 6096

- Fit expansion tank cap.
- Start engine and maintain an engine speed of about 2000 rpm for approx. 3 minutes.
- Run engine until radiator fan cuts-in.
- Check coolant level and replenish as necessary. When the engine is at normal operating temperature, the coolant level must be on the max. mark, when the engine is cold, between the min. and max. marks.

Protected by copyright. Copying for private or commercial purposes, in part or in whole, is not permitted unless authorised by Volkswagen AG. Volkswagen AG does not guarantee or accept any liability with respect to the correctness of information in this document. Copyright by Volkswagen AG.
satelettronica

1.6 - Removing and installing radiator

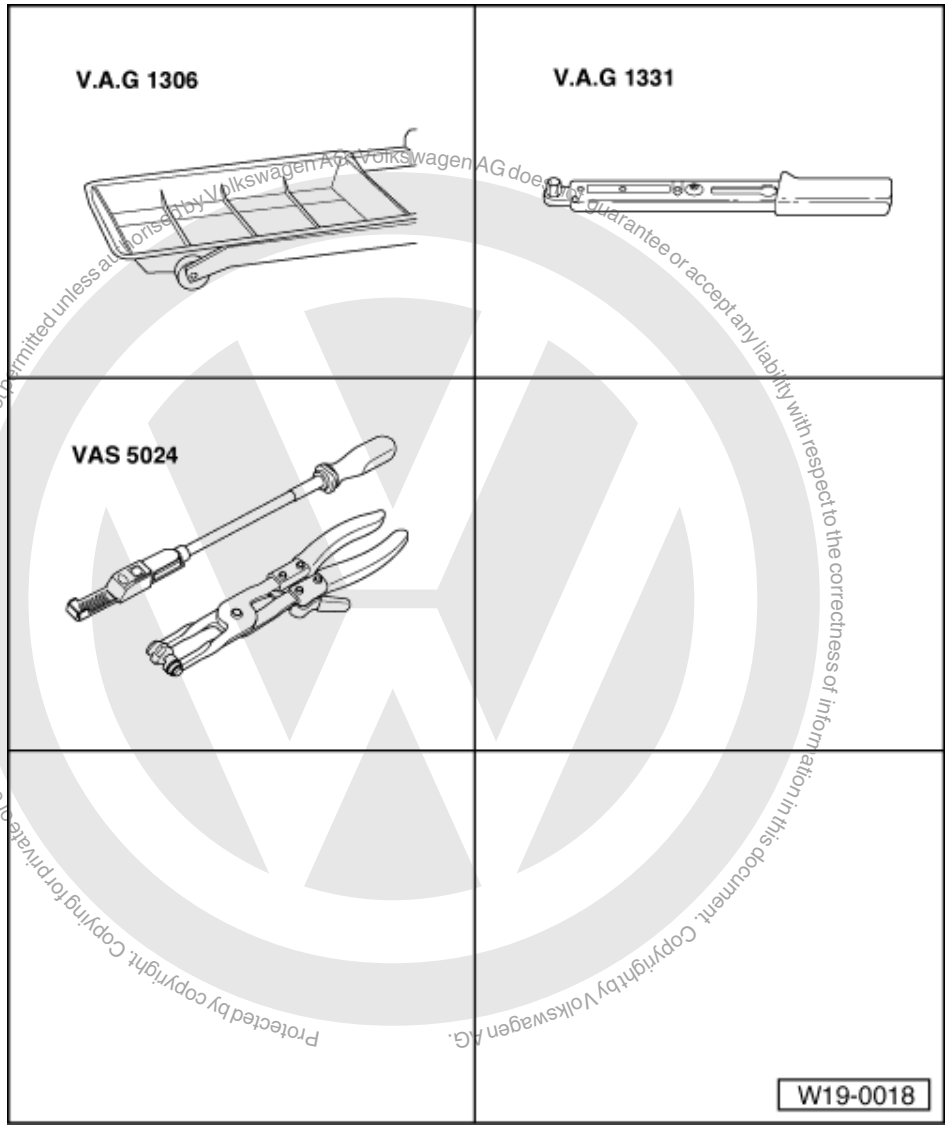

Protected by copyright. Copying for private or commercial purposes, in part or in whole, is not permitted unless authorised by Volkswagen AG. Volkswagen AG does not guarantee or accept any liability with respect to the correctness of information in this document. Copyright by Volkswagen AG.

satelettronica

Special tools, workshop equipment, test and measuring appliances and auxiliary items required

- V.A.G 1306 Drip tray
- V.A.G 1331 Torque wrench (5...50 Nm)
- VAS 5024 Assembly tool for spring-type clip
- Anti-freeze tester

Removing

- First remove radiator grille and trim.

=> General body repairs; Repair group 66; Trims; Removing and installing radiator grille and trim frame Trims Removing and installing radiator grille and trim frame

Vehicles with air conditioning system:

- Observe additional information and removal work => Page 110 .

- Drain coolant => Page 107 .
- Pull coolant hoses off radiator.
- Pull connectors off thermo-switch.
- Remove radiator fan together with fan ring.

- Remove radiator securing bolts and take out radiator.

Installing

Installation is carried out in the reverse order, when doing this note the following:

- Filling with coolant => Page 107

- Electrical connections and routing:

=> Current flow diagrams, Electrical fault finding and Fitting locations

Additional information and removal work on vehicles with air conditioner

Warning! The air conditioning system refrigerant circuit must not be opened.

Note:

To prevent damage to condenser and also to the refrigerant lines/hoses, ensure that the pipes and hoses are not stretched, kinked or bent.

- Removing lock carrier with attachments:

=> General body repairs; Repair group 50; Lock carrier; Removing and installing lock carrier with grille Lock carrier Removing and installing lock carrier with grille

- Remove retaining clamp(s) from refrigerant pipes.
- Unbolt condenser from radiator and secure to lock carrier.
- Secure condenser to body so that refrigerant pipes/hoses are not stressed.

- Unbolt air conditioner fluid reservoir and allow to hang free.
- Remove radiator securing bolts.
- Pull radiator out carefully.

Protected by copyright. Copying for private or commercial purposes, in part or in whole, is not permitted unless authorised by Volkswagen AG. Volkswagen AG does not guarantee or accept any liability with respect to the correctness of information in this document. Copyright by Volkswagen AG.
satelettronica

1.7 - Removing and installing coolant pump

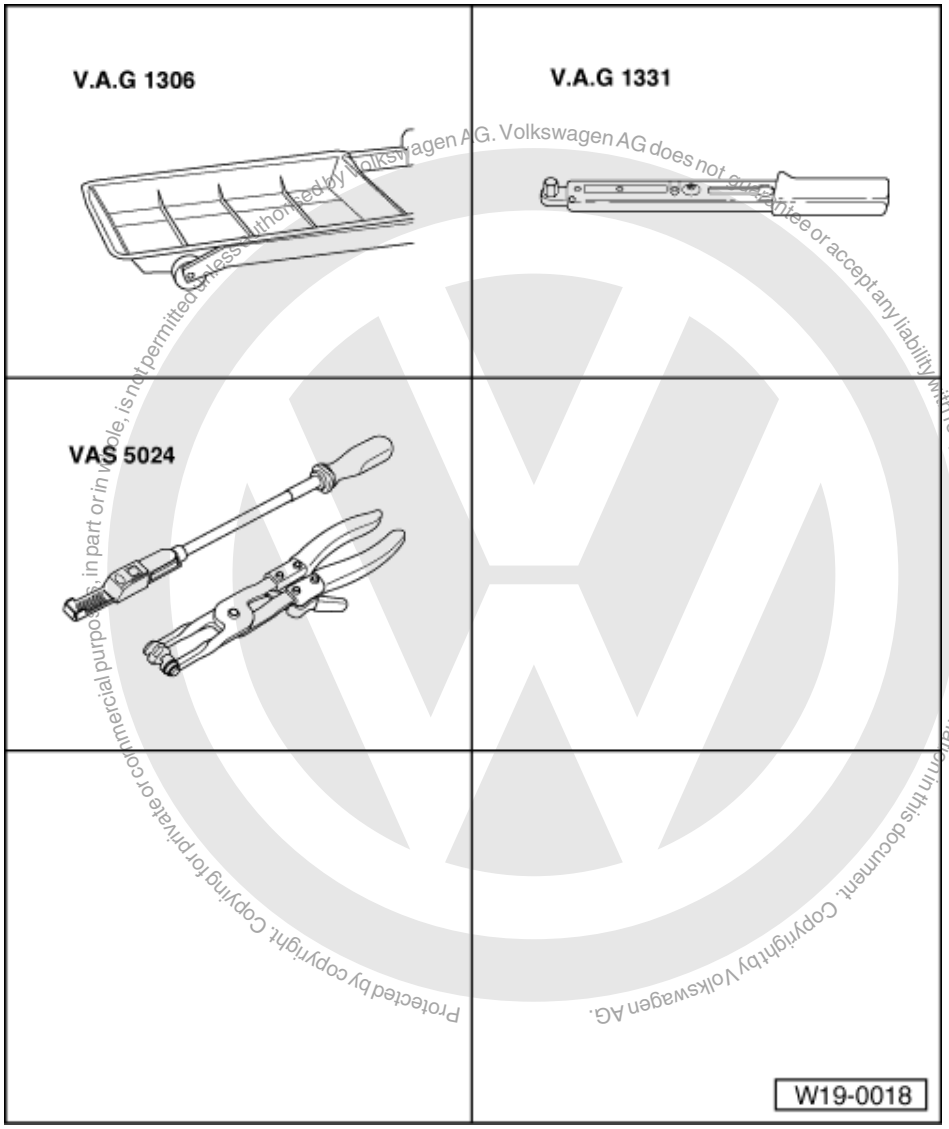

Protected by copyright. Copying for private or commercial purposes, in part or in whole, is not permitted unless authorised by Volkswagen AG. Volkswagen AG does not guarantee or accept any liability with respect to the correctness of information in this document. Copyright by Volkswagen AG.

satelettronica

Special tools, workshop equipment, test and measuring appliances and auxiliary items required

- V.A.G 1306 Drip tray
- V.A.G 1331 Torque wrench (5...50 Nm)
- VAS 5024 Assembly tool for spring-type clip
- Anti-freeze tester

Notes:

- The integrated coolant pump seal must not be separated from the coolant pump.
- Damaged or leaking coolant pumps must be replaced complete with seal.

Removing

- Drain coolant => Page 107
- First remove main drive toothed belt => Page 24 .

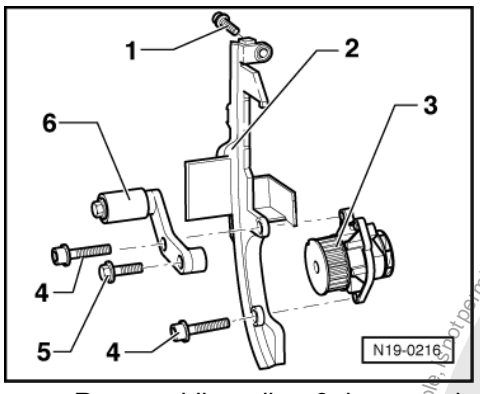

- -> Remove idler roller -6- by removing idler roller bolt -5-.
- Remove bolts -1- and -4- and remove rear toothed belt guard -2- and coolant pump -3-.

Installing

Installation is carried out in the reverse order, when doing this note the following:

- Insert coolant pump -3- in cylinder block and install securing bolt -4- together with rear toothed belt guard.
- Tighten securing bolts -4- to 20 Nm and -1- to 10 Nm.
- Install idler roller -6- and tighten securing bolt -5- to 50 Nm.
- Install toothed belt and tension => Page 24 .
- Install ribbed belt => Page 21 .
- Filling with coolant => Page 107

Protected by copyright. Copying for private or commercial purposes, in part or in whole, is not permitted unless authorised by Volkswagen AG. Volkswagen AG does not guarantee or accept any liability with respect to the correctness of information in this document. Copyright by Volkswagen AG.
satelettronica

20 - Fuel supply system

1 - Removing and installing parts of fuel supply system

1.1 - Removing and installing parts of fuel supply system

Notes:

- Hoses are secured with spring-type clips. In cases of repair only use spring-type clips.
- Fuel hoses in engine compartment must only be secured with spring-type clips. The use of clamp or screw-type clips is not permissible.
- For fitting the spring-type clips, assembly tool VAS 5024 is recommended.

Observe safety precautions=> Page 124 .

Observe rules for cleanliness => Page 124 .

Removing and installing fuel tank with its attachments, Polo Classic, Polo Estate => Page 114 .

Removing and installing fuel tank with its attachments, Caddy => Page 119 .

Observe crash fuel shut-off => Page 128 .

Checking electronic power control (EPC) => Page 136 .

Servicing parts of the activated charcoal filter system => Page 143 .

Protected by copyright. Copying for private or commercial purposes, in part or in whole, is not permitted unless authorised by Volkswagen AG. Volkswagen AG does not guarantee or accept any liability with respect to the correctness of information in this document. Copyright by Volkswagen AG.
satelettronica

1.2 - Removing and installing fuel tank with its attachments, Polo Classic, Polo Estate

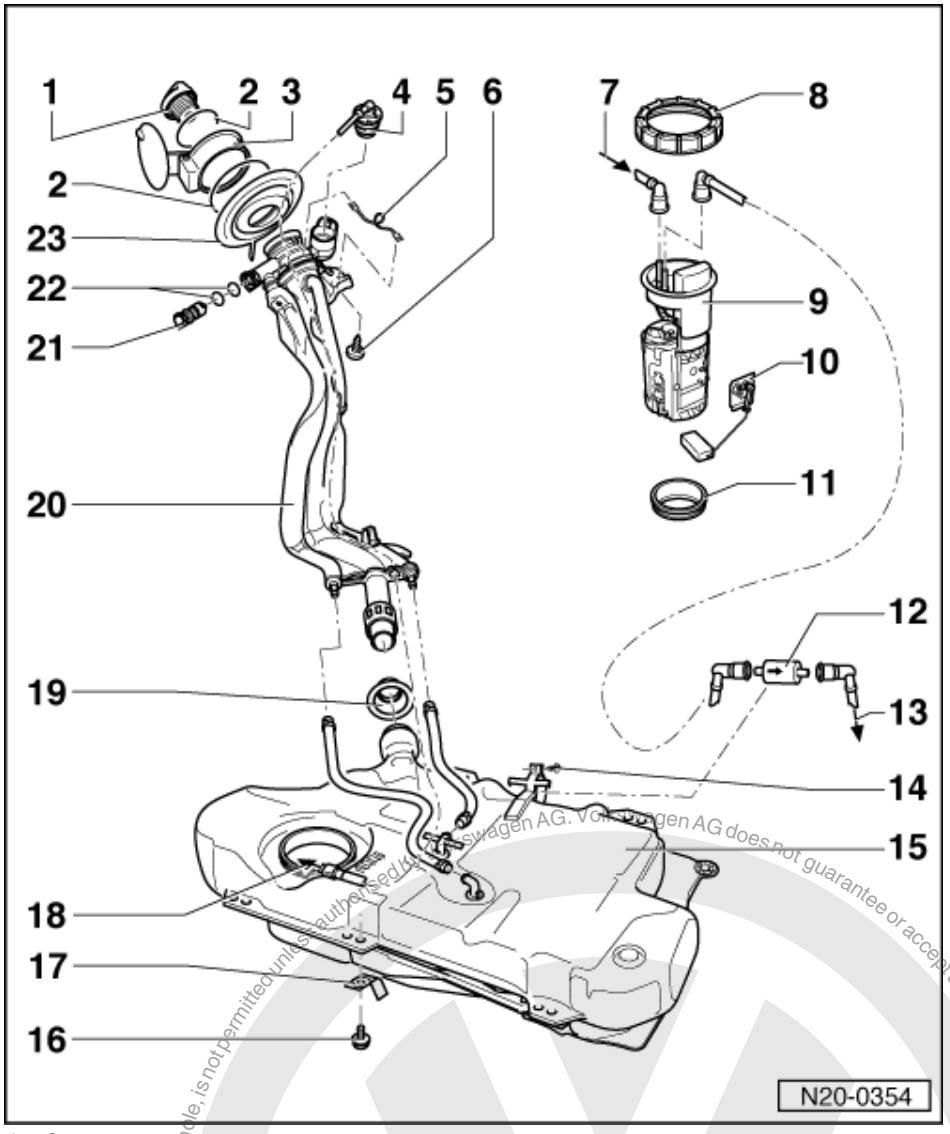

1 Cap
2 Retaining ring
3 Tank flap unit
- Removing and installing

=> General body repairs; Repair group 55; fuel flap unit fuel flap unit

4 Gravity/overflow valve
- To remove, release locking lug and unclip valve upwards out of filler neck
- Check valve for through-flow
  valve vertical: open,
  valve tilted 90 °: closed

5 Earth connection

Protected by copyright. Copying for private or commercial purposes, in part or in whole, is not permitted unless authorised by Volkswagen AG. VW Volkswagen AG does not guarantee or accept any liability with respect to the correctness of information in this document. Copyright by Volkswagen AG.
satelettronica

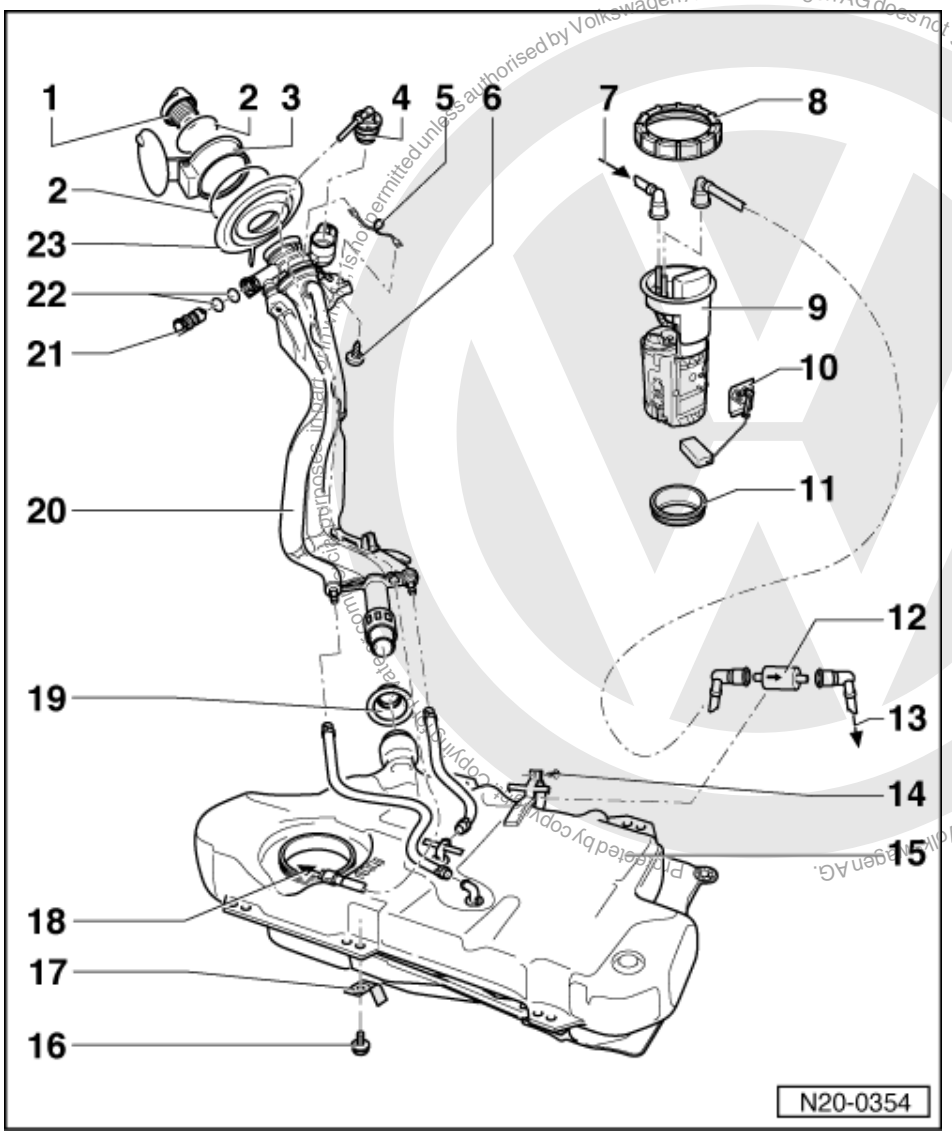

6 10 Nm

7 Return pipe
- Blue
- From fuel manifold

=> Repair group 24; Servicing injection system; Dismantling and assembling fuel rail with injectors Servicing injection system Dismantling and assembling fuel rail with injectors

8 Union nut
- Remove and install with spanner 3217

9 Fuel delivery unit
- Removing and installing
  => Page 125
- Checking fuel pump
  => Page 129
- Note fitting location on fuel tank
  => Page 124 , Fig. 1

satelettronica

Protected by copyright. Copyright by Volkswagen AG. Volkswagen AG does not guarantee or accept any liability with respect to the correctness of information in this document. Copyright by Volkswagen AG. Reproduction, in whole or in part, is not permitted unless authorised by Volkswagen AG. For internal purposes only.

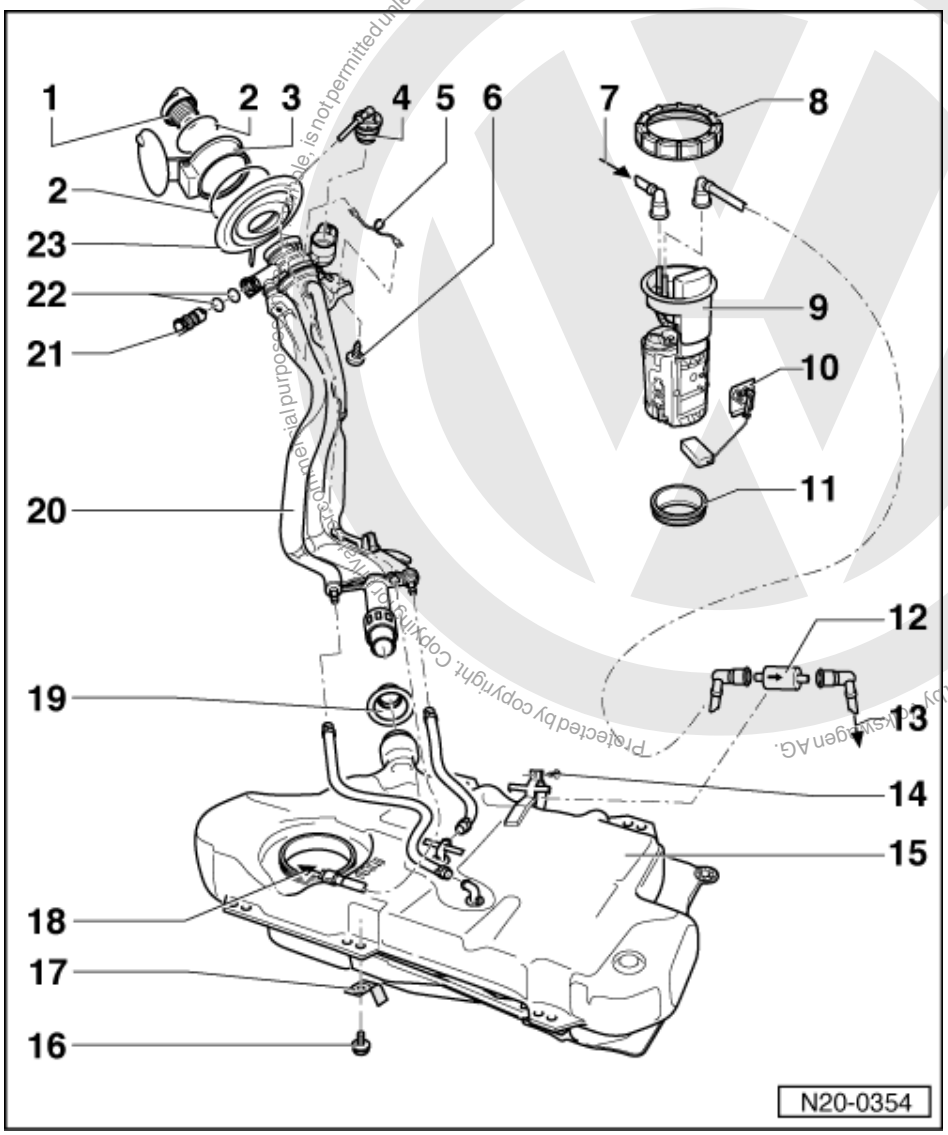

10 Fuel gauge sender

- Removing and installing
  => Page 126
- Adjusting:

=> Electrical system self-diagnosis; Repair group 01; Self-diagnosis for dash panel insert; Checking fuel gauge (adapting) Self-diagnosis for dash panel insert Checking fuel gauge (adapting)

11 Sealing ring

- Renew if damaged
- Coat with fuel when installing

12 Fuel filter

- Fitting position: Arrow points in direction of flow

13 Supply pipe

- Black
- To fuel manifold

=> Repair group 24; Servicing injection system; Dismantling and assembling fuel rail with injectors Servicing injection system Dismantling and assembling fuel rail with injectors

satelettronica

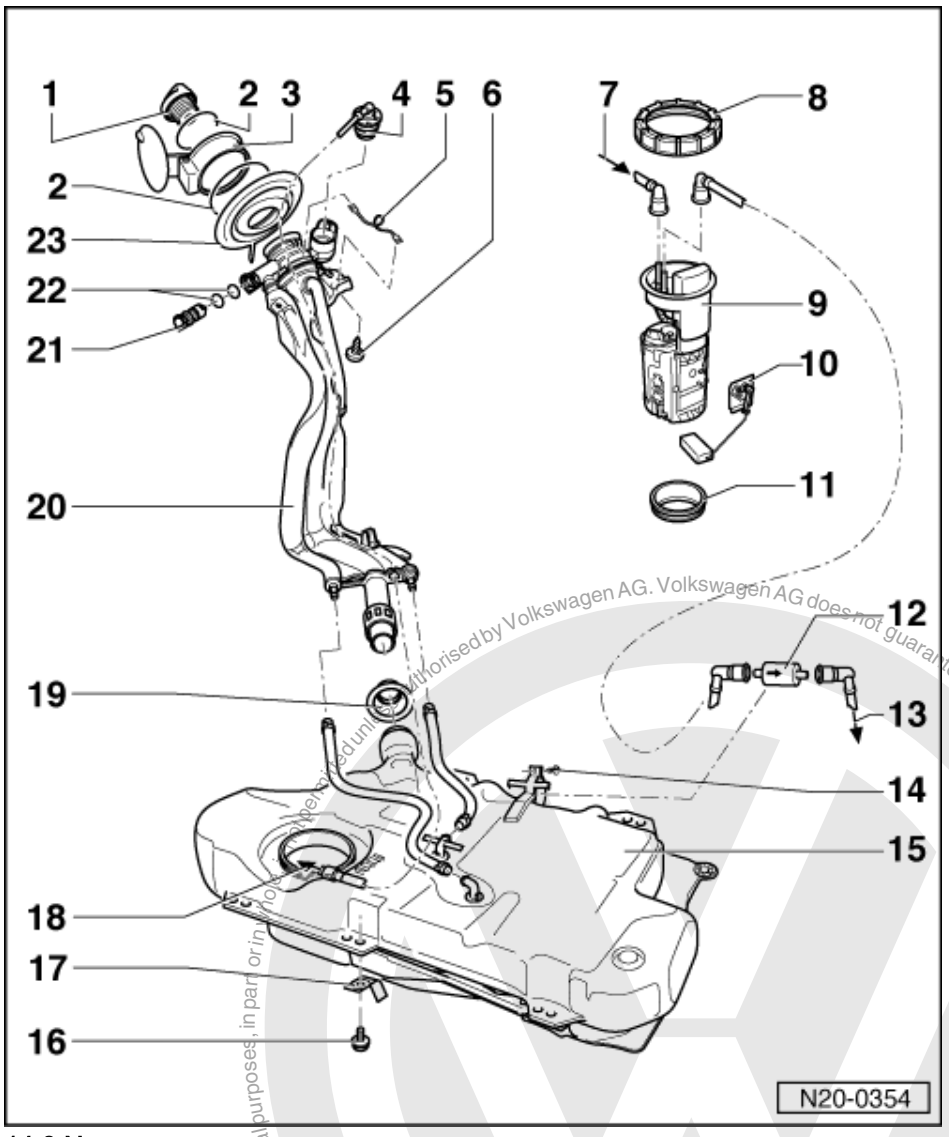

14 3 Nm

15 Fuel tank

- Removing and installing
  => Page 126
- Press clamping washer from heat shield tightly onto pins on vehicle floor

16 25 Nm

17 Securing strap

18 Vent pipe

- To activated charcoal filter
  => Page 143 , item 1

19 Sealing boot

- After installing filler pipes fit over fuel tank connections, having turned boot inside out

20 Filler pipes

- With non-return valve

Protected by copyright. Copying for private or commercial purposes, in part or in whole, is not permitted unless authorised by Volkswagen AG. Volkswagen AG does not guarantee or accept any liability with respect to the correctness of information in this document. Copyright by Volkswagen AG.
satelettronica

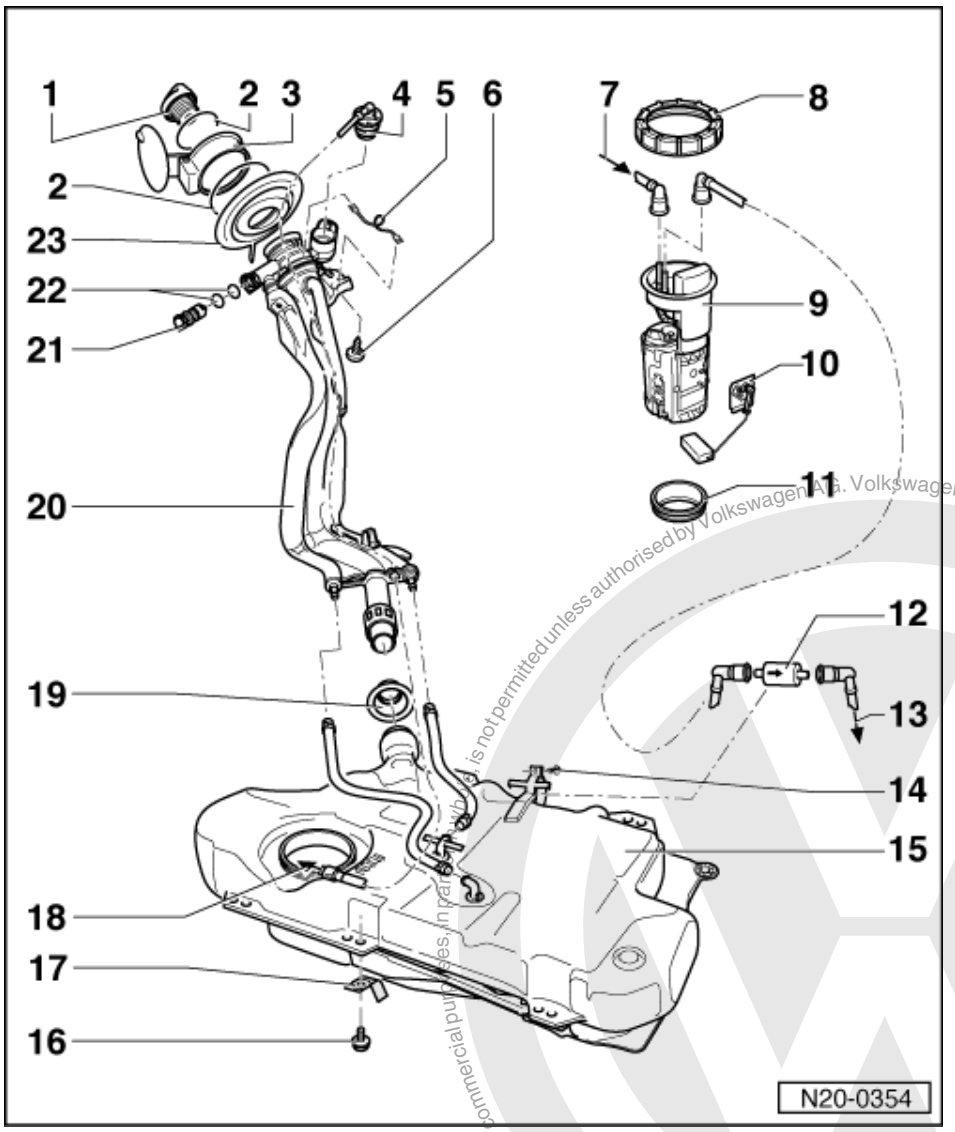

21 Vent valve

- Checking =>Page 124 , Fig. 2
- To remove pull locking latch lightly to inside -arrow- and pull valve out

22 O-ring

- Renew if damaged

23 Cup

- For filler pipes

Protected by copyright. Copying for private or commercial purposes, in part or in whole, is not permitted unless authorised by Volkswagen AG. Volkswagen AG does not guarantee or accept any liability with respect to the correctness of information in this document. Copyright by Volkswagen AG.
satelettronica

1.3 - Removing and installing fuel tank with its attachments, Caddy

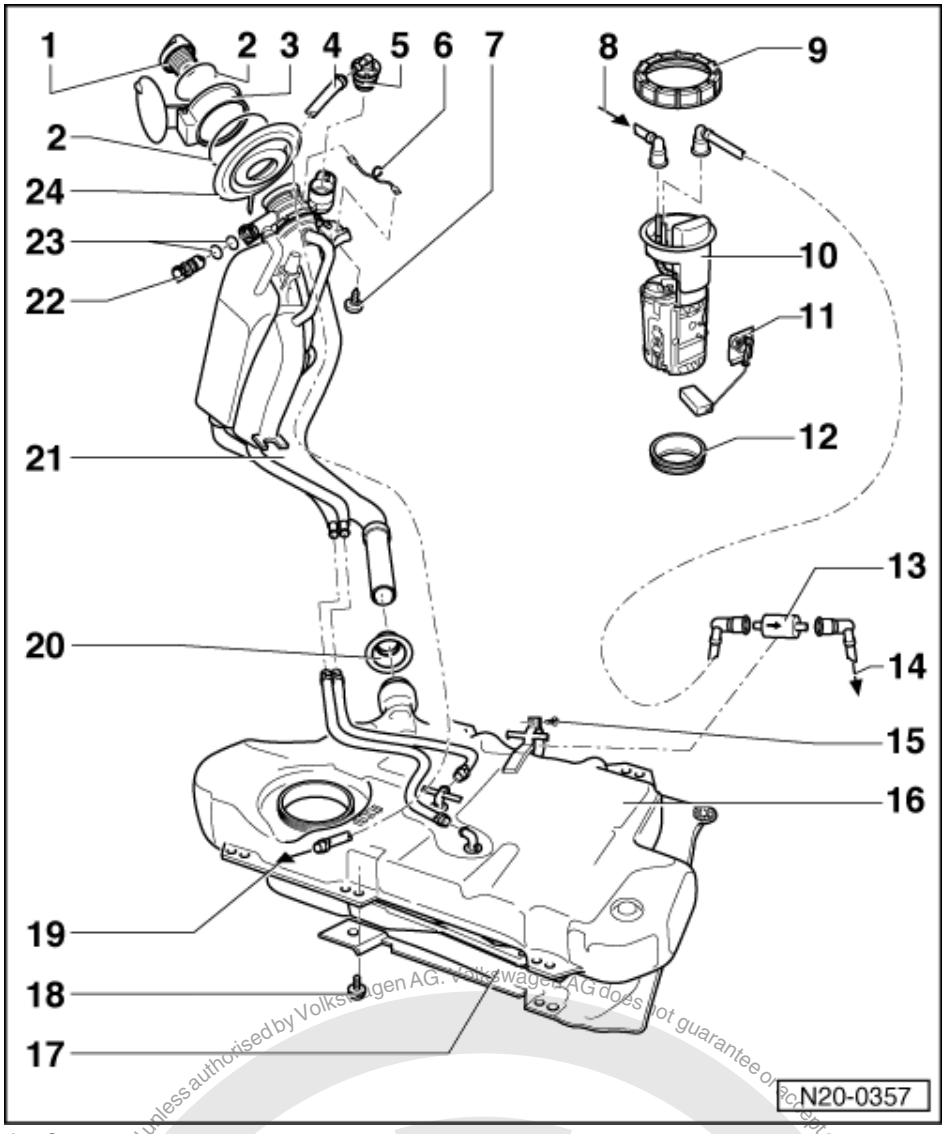

1 Cap
2 Retaining ring
3 Tank flap unit
- Removing and installing

=> General body repairs; Repair group 55; fuel flap unit fuel flap unit

4 Vent pipe
5 Gravity/overflow valve
- To remove, release locking lug and unclip valve upwards out of filler neck
- Check valve for through-flow
  valve vertical: open,
  valve tilted 90 °: closed

satelettronica
Protected by copyright. Copying for private or commercial purposes, in part or in whole, is not permitted unless authorised by Volkswagen AG. Volkswagen AG does not guarantee or accept any liability with respect to the correctness of information in this document. Copyright by Volkswagen AG.

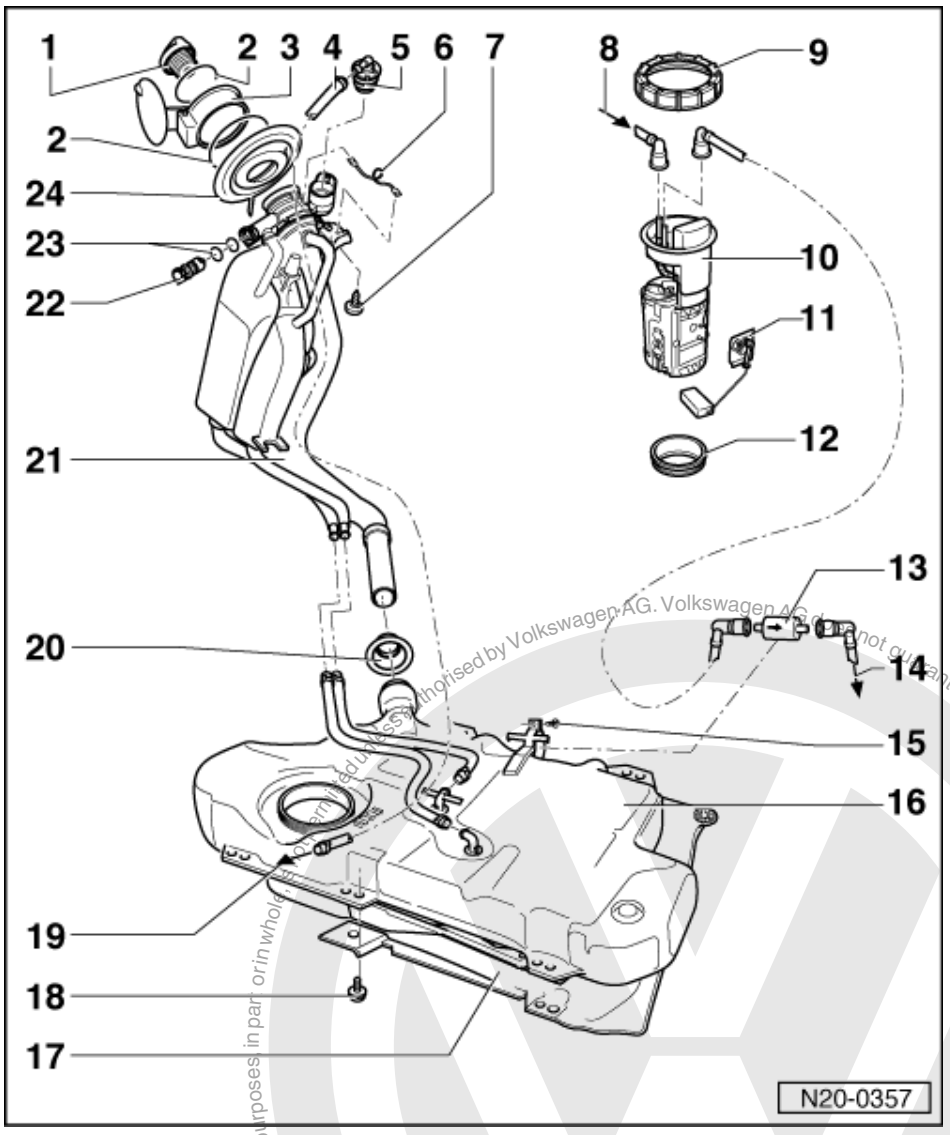

6 Earth connection
7 10 Nm
8 Return pipe
- Blue
- From fuel manifold

=> Repair group 24; Servicing injection system; Dismantling and assembling fuel rail with injectors Servicing injection system Dismantling and assembling fuel rail with injectors

9 Union nut
- Remove and install with ring nut spanner 3217

10 Fuel delivery unit
- Removing and installing
  => Page 125
- Checking fuel pump
  => Page 129
- Note fitting position on fuel tank => Fig. 1

Protected by copyright. Copyright by Volkswagen AG.
Copying for private or commercial purposes, in part or in whole, is not permitted unless authorised by Volkswagen AG. Volkswagen AG does not guarantee or accept any liability with respect to the correctness of information in this document.
satelettronica

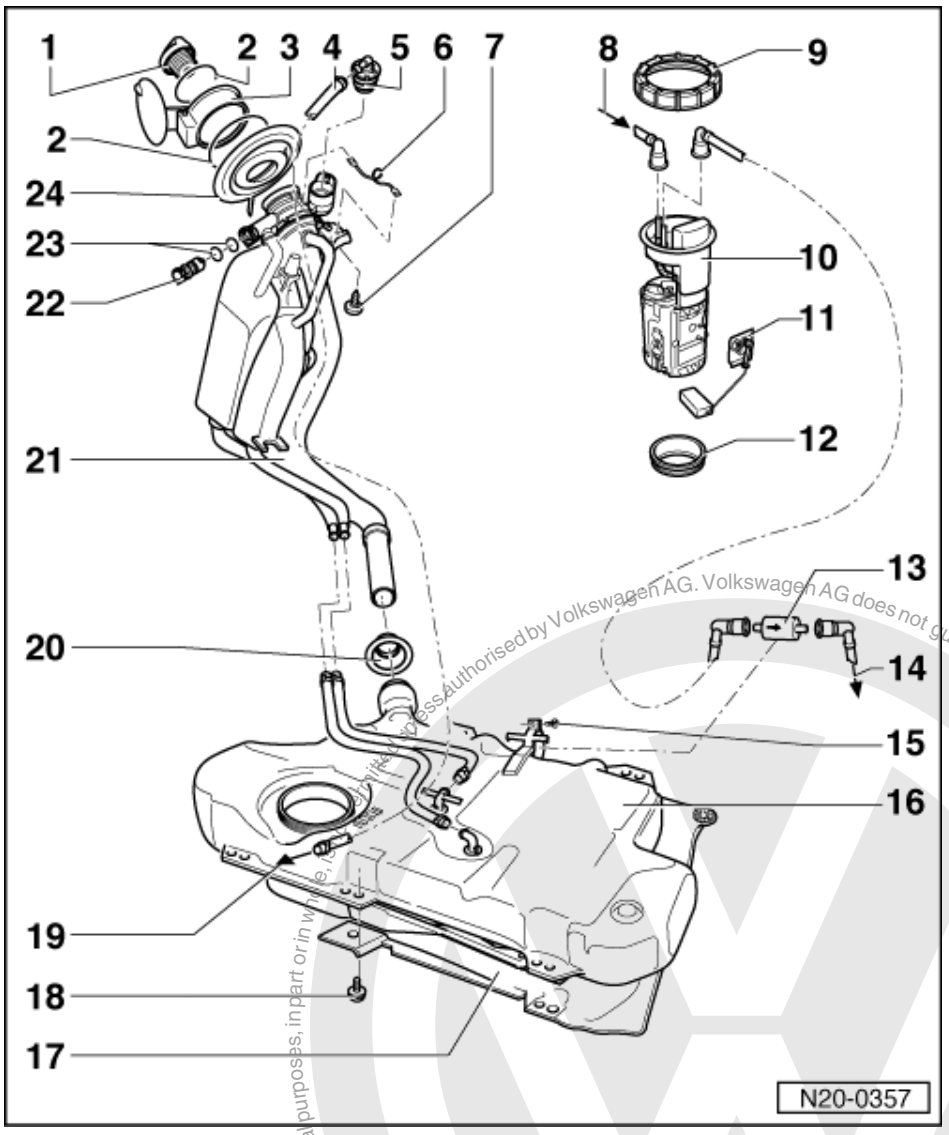

11 Fuel gauge sender

- Removing and installing
  => Page 126
- Adjusting:

=> Electrical system self-diagnosis; Repair group 01; Self-diagnosis for dash panel insert; Checking fuel gauge (adapting) Self-diagnosis for dash panel insert Checking fuel gauge (adapting)

12 Sealing ring

- Renew if damaged
- Coat with fuel when installing

13 Fuel filter

- Fitting position: Arrow points in direction of flow

14 Supply pipe

- Black
- To fuel manifold

=> Repair group 24; Servicing injection system; Dismantling and assembling fuel rail with injectors Servicing injection system Dismantling and assembling fuel rail with injectors

Protected by copyright. Copyright by Volkswagen AG.
Copyright by Volkswagen AG. Volkswagen AG does not guarantee or accept any liability with respect to the correctness of information in this document.
satelettronica

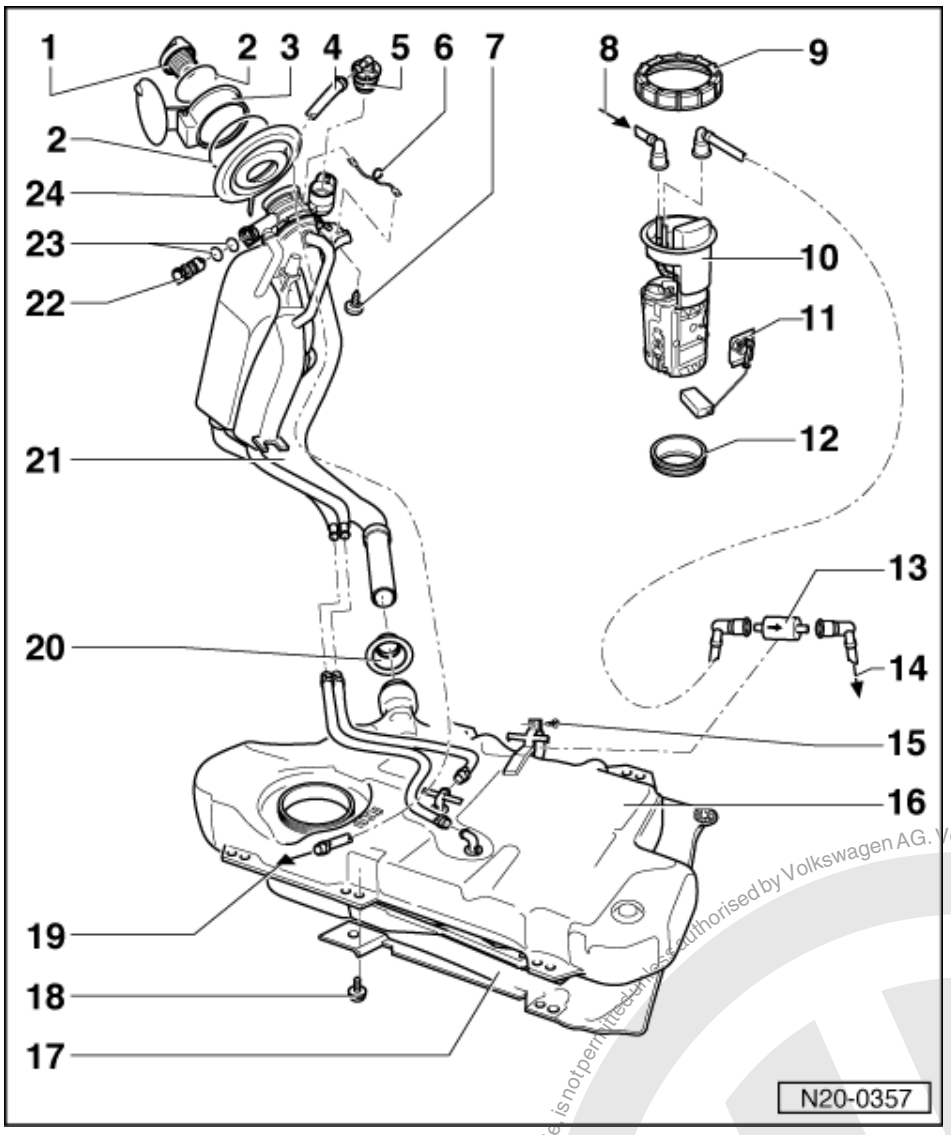

15 3 Nm

16 Fuel tank

- Removing and installing
  => Page 126

17 Heat shield

- Press clamping washer from heat shield tightly onto pins on vehicle floor

18 25 Nm

19 Vent pipe

- To activated charcoal filter
  => Page 143 , item 1

20 Sealing boot

- After installing filler pipes fit over fuel tank connections, having turned boot inside out

21 Filler pipes

- With non-return valve

Protected by copyright. Copying for private or commercial purposes, in part or in whole, is not permitted unless authorised by Volkswagen AG. Volkswagen AG does not guarantee or accept any liability with respect to the correctness of information in this document. Copyright by Volkswagen AG.
satelettronica

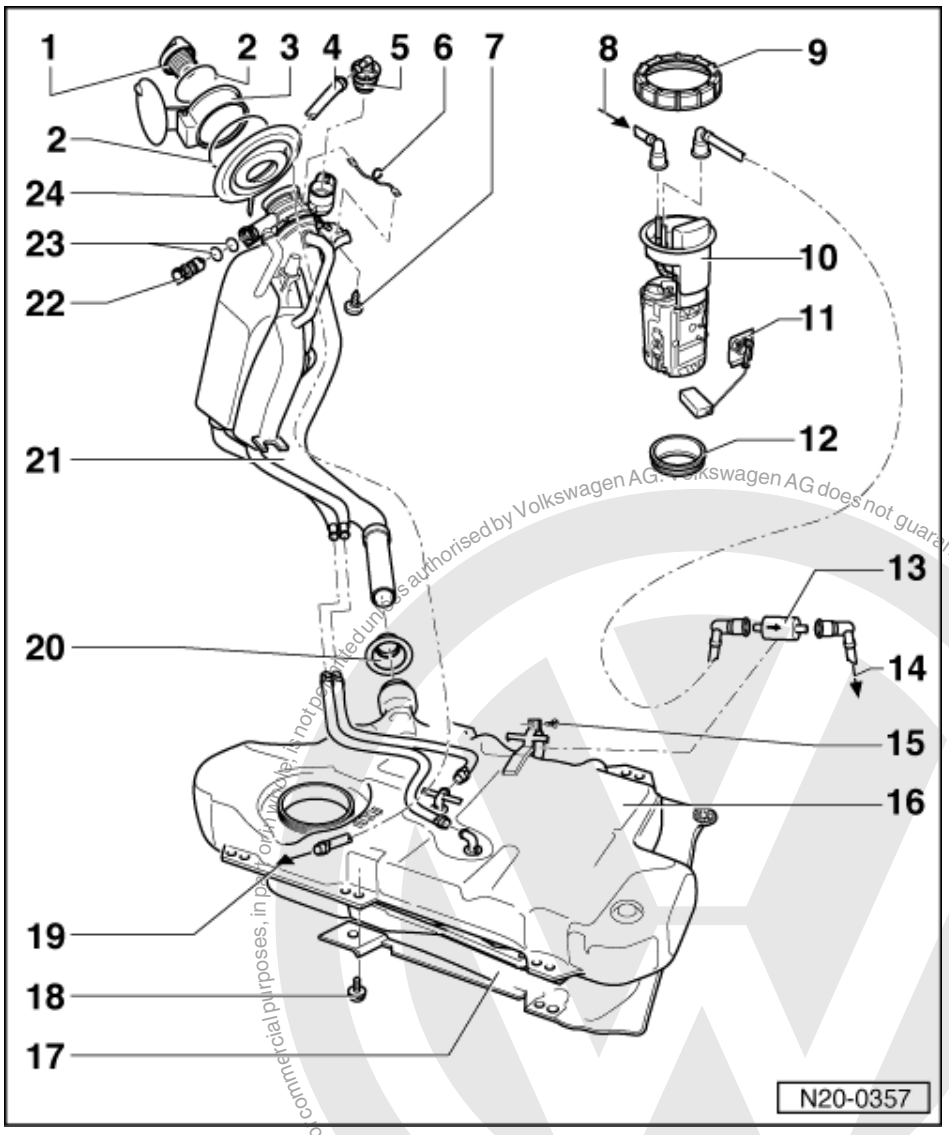

22 Vent valve

- Checking =>Fig. 2
- To remove pull locking latch lightly to inside -arrow- and pull valve out

23 O-ring

- Renew if damaged

24 Cup

- For filler pipes

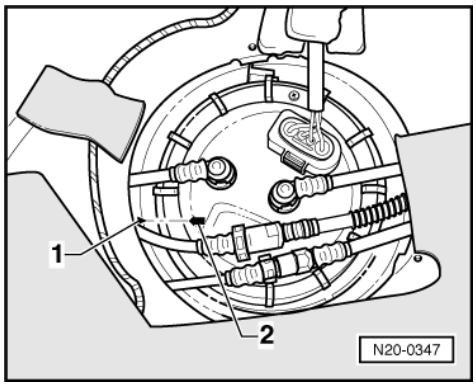

Protected by copyright. Copyright by Volkswagen AG.
Volkswagen AG does not guarantee or accept any liability with respect to the correctness of information in this document.
Copyright by Volkswagen AG.
For private or commercial purposes, in part or in whole, is not permitted unless authorised by Volkswagen AG.
satelettronica

-> Fig. 1 Installation position of fuel delivery unit flange

Marking -2- on the flange must align with marking -1- on the fuel tank.

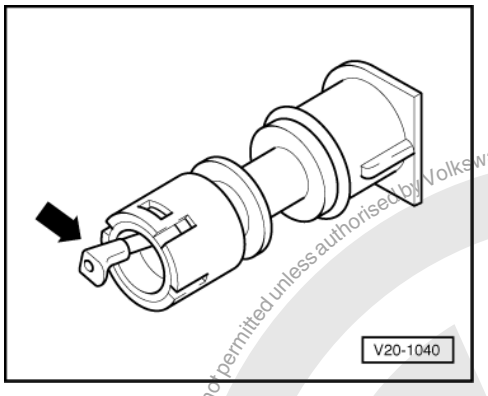

-> Fig. 2 Checking vent valve

Lever in rest position: Closed

Lever pushed in direction of arrow: Open

1.4 - Safety precautions when working on the fuel supply system

Warning!
Fuel supply lines are under pressure! Before removing from hose connection wrap a cloth around the connection. Then release pressure by carefully pulling hose off connection.

When removing and installing the fuel gauge sender or fuel pump (fuel delivery unit) from a full or partly full fuel tank the following must be observed:

- Before commencing work, switch on exhaust extraction system and place an extraction hose close to the sender opening in the fuel tank to extract escaping fuel fumes.
  If no exhaust extraction system is available, a radial fan (as long as motor is not in air flow) with a displacement greater than 15 m3/h can be used.
- Prevent skin contact with fuel! Wear fuel-resistant gloves!

1.5 - Rules for cleanliness

When working on the fuel supply/injection system, pay careful attention to the following "5 rules":

- Thoroughly clean all unions and the adjacent areas before disconnecting.
- Place parts that have been removed on a clean surface and cover. Do not use fluffy cloths!
- Carefully cover opened components or seal, if the repair cannot be carried out immediately.
- Only install clean components:
  Only unpack replacement parts immediately prior to installation.
  Do not use parts that have been stored loose (e.g. in tool boxes etc.).
- When the system is open:
  Do not work with compressed air if this can be avoided.
  Do not move vehicle unless absolutely necessary.

Copyright by Volkswagen AG. Volkswagen AG does not guarantee or accept any liability with respect to the correctness of information in this document. Copying for private or commercial purposes, in part or in whole, is not permitted unless authorised by Volkswagen AG.
satelettronica

1.6 - Removing and installing fuel delivery unit

Special tools, workshop equipment, testers, measuring instruments and auxiliary items required

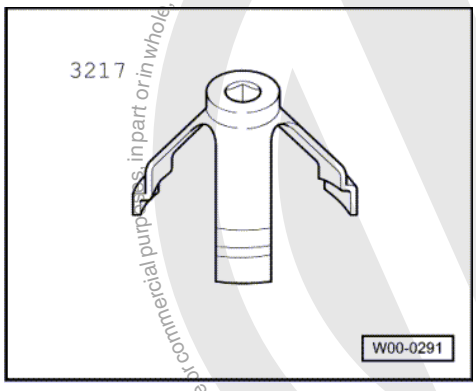

- 3217 Ring nut spanner

Removing

- First check whether a coded radio is fitted. If this is the case obtain the anti-theft coding.
- Note safety precautions before starting work => Page 124
- With ignition switched off disconnect battery earth strap.

Caddy Van:

- Lift front, right load area floor covering.
- Now remove the right-hand load area floor piece.

=> General body repairs; Repair group 70; Removing and installing load compartment floor panel (Caddy)
Removing and installing load compartment floor panel (Caddy)

- Remove floor cover.

Caddy Kombi, Polo Classic, Polo Estate:

- Fold rear seat forwards.
- Remove floor cover.

When the floor cover is removed:

> Warning!
> Fuel supply lines are under pressure! Before removing from hose connection wrap a cloth around the connection. Then release pressure by carefully pulling hose off connection.

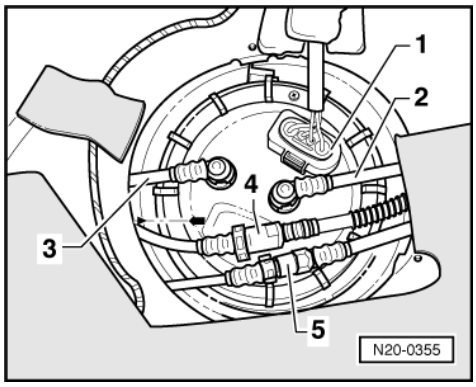

- -> Pull connector -1- and supply and return pipes -2, 3- off flange.
- Separate breather pipe -4- and supply pipe -5- at connections.

Protected by copyright. Copyright by Volkswagen AG. Volkswagen AG does not guarantee or accept any liability with respect to the correctness of information in this document. Copying for private or commercial purposes, in part or in whole, is not permitted unless authorised by Volkswagen AG.
satelettronica

- Fit spanner 3217 on the three rounded ribs on the union nut and unscrew union nut from flange.
- Pull fuel delivery unit and seal out of the opening in fuel tank.

Note:

If the delivery unit is to be renewed then drain old delivery unit before disposal.

Installing

- Installation of the fuel delivery unit is carried out in the reverse order.

Notes:

- When inserting the fuel delivery unit ensure that the fuel gauge sender is not bent.
- Coat flange seal with fuel when fitting.
- Fitting position of fuel delivery unit flange => Page 124 , Fig. 1 .

1.7 - Removing and installing fuel gauge sender

Removing

- Remove fuel delivery unit
  => Page 125 .

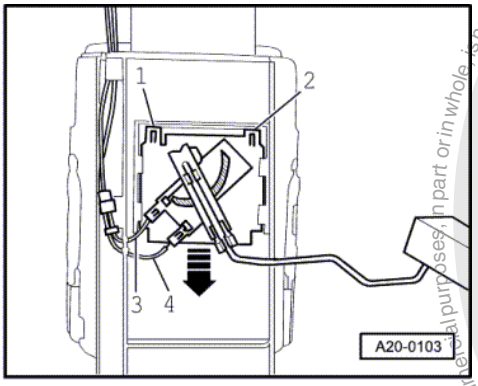

- -> Release and pull off the terminals for wires -3- and -4-.
- Lift retaining tabs -1- and -2- with a screwdriver and pull fuel gauge sender off downwards -arrow-.

Installing

- Insert fuel gauge sender in the guides on the fuel delivery unit and push up until it engages.

1.8 - Removing and installing fuel tank

Special tools, workshop equipment, testers, measuring instruments and auxiliary items required

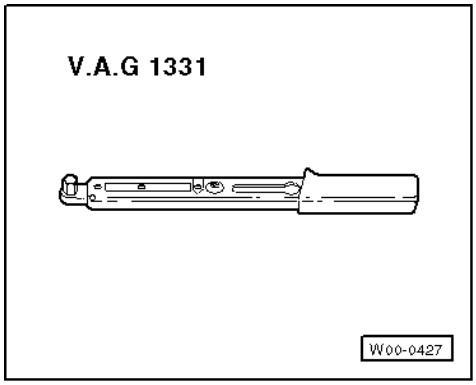

Protected by copyright. Copying for private or commercial purposes, in part or in whole, is not permitted unless authorised by Volkswagen AG. Volkswagen AG does not guarantee or accept any liability with respect to the correctness of information in this document. Copyright by Volkswagen AG.
satelettronica

- V.A.G 1331 Torque wrench (5...50 Nm)

Removing

- Note safety precautions before starting work
  => Page 124
- First check whether a coded radio is fitted. If this is the case obtain the anti-theft coding.
- With ignition switched off disconnect battery earth strap.

Caddy Van:

- Lift front, right load area floor covering.
- Now remove the right-hand load area floor piece.

=> General body repairs; Repair group 70; Removing and installing load compartment floor panel (Caddy)
Removing and installing load compartment floor panel (Caddy)

- Remove floor cover.

Caddy Kombi, Polo Classic, Polo Estate:

- Unscrew securing bolts and remove tank flap unit.

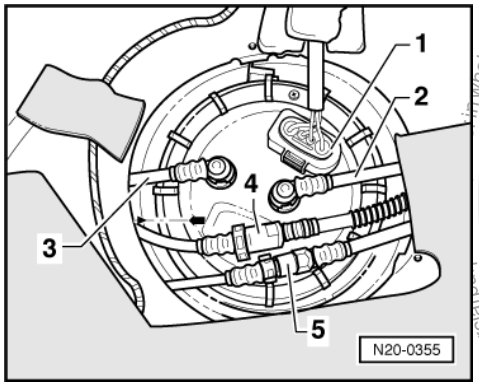

- Fold rear seat bench forwards.
- Remove floor cover.

When the floor cover is removed:

- -> Pull connector -1- and return pipe -3- off flange.
- Separate breather pipe -4- and supply pipe -5- at connections.
- Drain fuel tank, clean fuel filler neck and surrounding area.

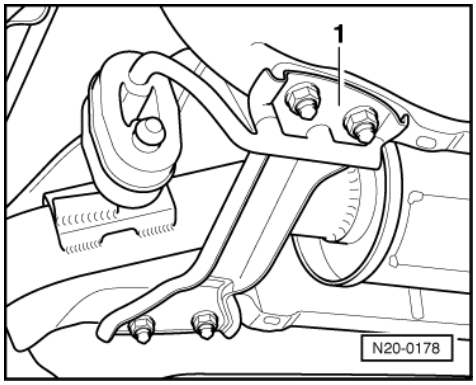

- -> Remove support bracket -1- from body.
- Remove all rear exhaust system mountings from body. Then lower the exhaust system slightly and secure to body with wire.
- Remove rear right wheel.
- Detach filler pipe from body.

Protected by copyright. Copying for private or commercial purposes, in whole, is not permitted unless authorised by Volkswagen AG. Volkswagen AG does not guarantee or accept any liability with respect to the correctness of information in this document. Copyright by Volkswagen AG.
satelettronica

- Take filler cap off filler neck and detach filler neck from cup.

Polo Classic, Polo Estate:

- Remove gravity/overflow valve and secure together with breather pipe on fuel tank. Removing gravity/overflow valve => Page 114 , item 4 .
- Remove filler neck.
- Remove tensioning strap. When doing this support fuel tank with engine/gearbox jack V.A.G 1383 A if necessary.
- Now the fuel tank can be removed together with the heat shield.

Caddy:

- Remove shock absorber upper securing nut and push securing bolt out inwards approx. 2 cm (Do not remove shock absorber).
- Remove heat shield on fuel tank.
- Take out fuel tank, when doing this guide fuel filler neck out between shock absorber and spring (turn fuel tank through 90°).

Installing

Installing is basically in the reverse order but note following:

- Breather and fuel hoses are to be installed kink-free.
- Do not interchange supply and return hose (return hose blue or with blue markings, supply hose black).

1.9 - Crash fuel shut-off

Function

Vehicles with an airbag are fitted with a crash fuel shut-off system. It reduces the danger of a fire in a crash as the fuel pump is switched off via the fuel pump relay.

When opening the fuel system:

Observe safety precautions=> Page 124 .

- Check fuel pump relay:

=> Current flow diagrams, Electrical fault finding and Fitting locations binder

Protected by copyright. Copyright by Volkswagen AG. Volkswagen AG does not guarantee or accept any liability with respect to the correctness of information in this document. Copyright by Volkswagen AG.
satelettronica

1.10 - Checking fuel pump

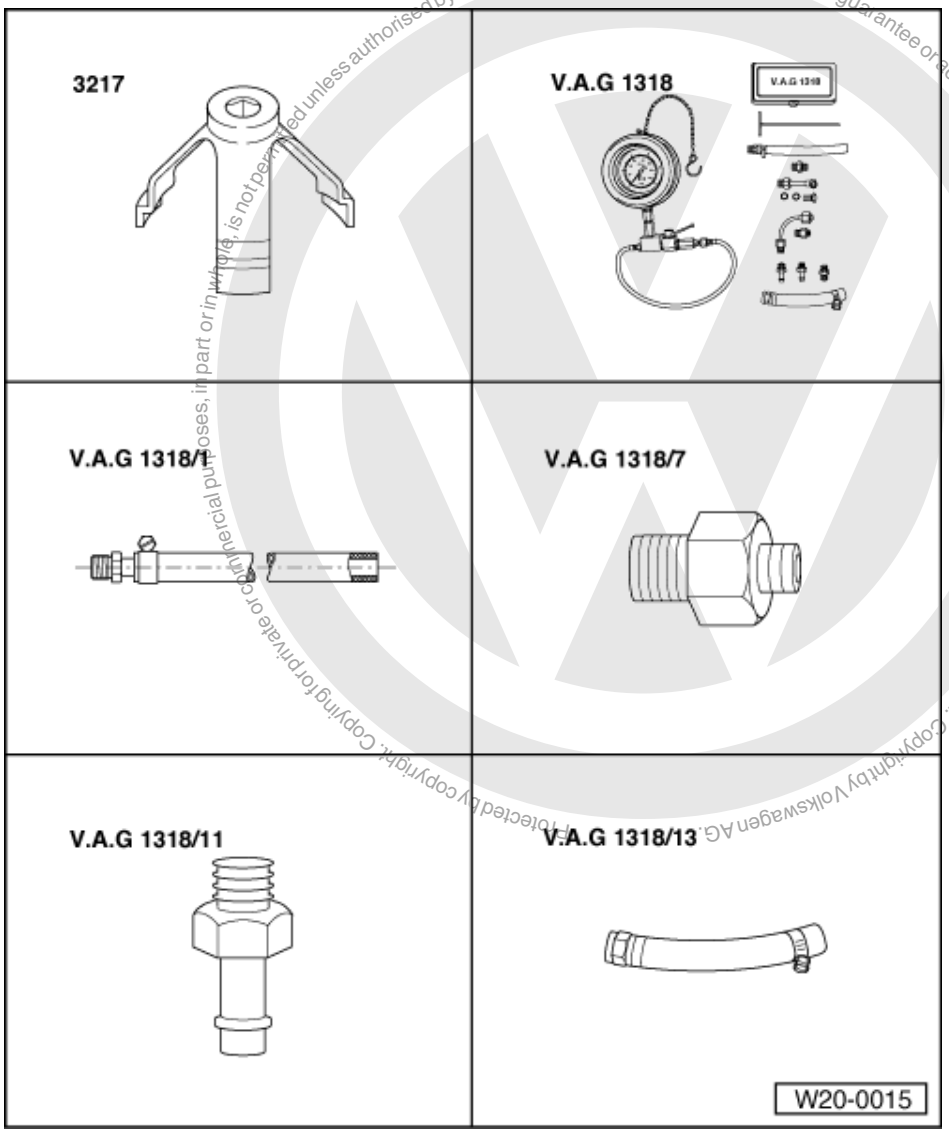

Protected by copyright. Copying for private or commercial purposes, in part or in whole, is not permitted unless authorised by Volkswagen AG. Volkswagen AG does not guarantee or accept any liability with respect to the correctness of information in this document. Copyright by Volkswagen AG.

satelettronica

Special tools, workshop equipment, test and measuring appliances and auxiliary items required

- 3217 Spanner for union nut
- V.A.G 1318 Pressure gauge
- V.A.G 1318/1 Adapter
- V.A.G1318/7 Adapter
- V.A.G 1318/11 Adapter
- V.A.G 1318/13 Adapter

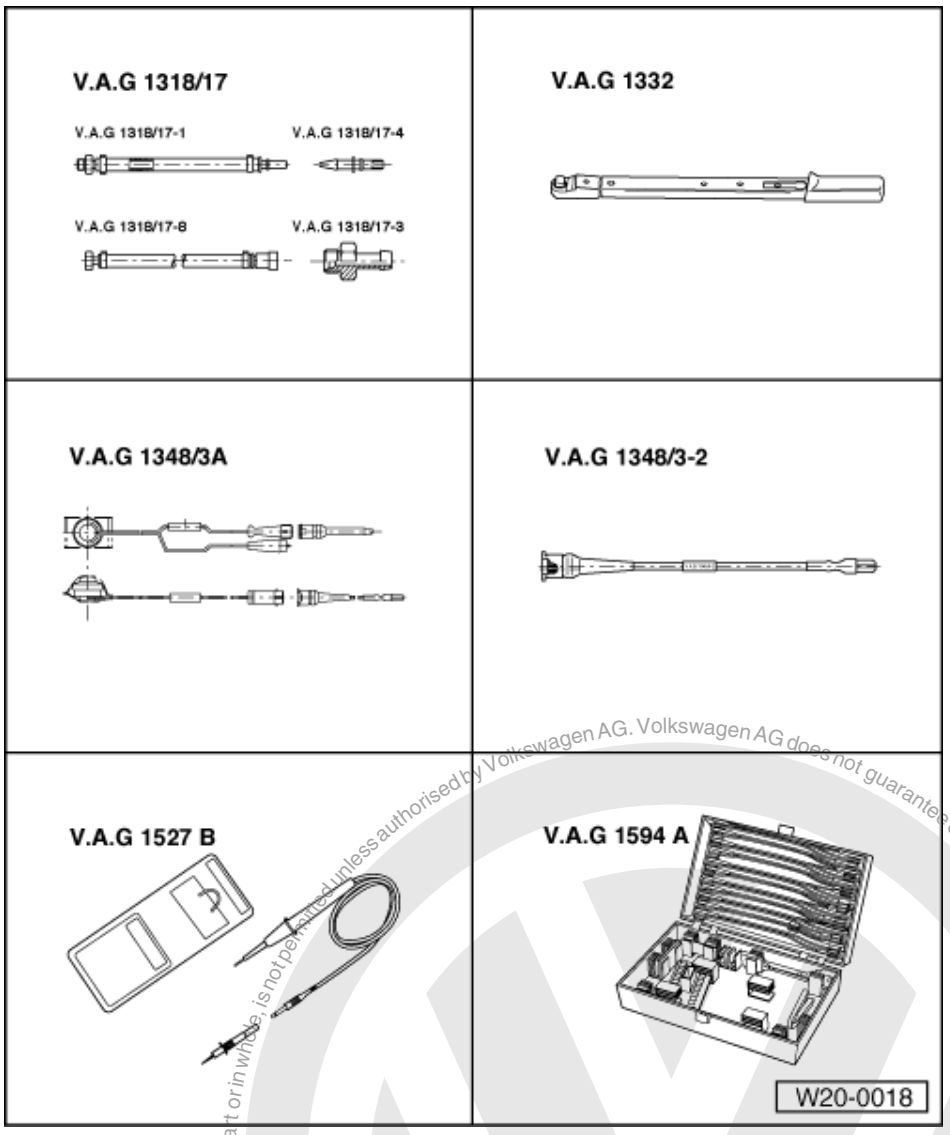

- V.A.G1318/17 Adapter
- V.A.G 1332 Torque wrench (40...200 Nm)
- V.A.G 1348/3 A Remote control
- V.A.G 1348/3-2 Adapter cable
- V.A.G 1527 B Diode test lamp
- V.A.G 1594 A Adapter set

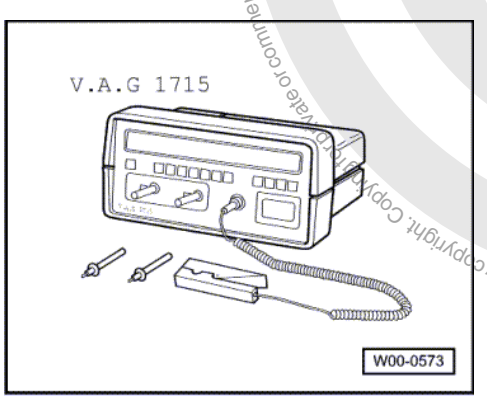

- V.A.G 1715 Multimeter
- Measuring container
- Current flow diagram

Protected by copyright. Copyright by Volkswagen AG.
Copyright by Volkswagen AG. Volkswagen AG does not guarantee or accept any liability with respect to the correctness of information in this document. Copying for private or commercial purposes, in part or in whole, is not permitted unless authorised by Volkswagen AG.
satelettronica

Test conditions

- Battery voltage at least 11.5 V

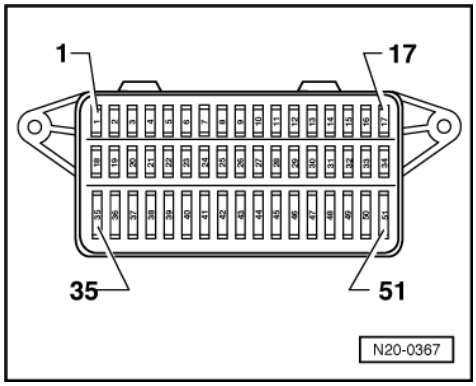

- -> Fuse No. 40 O.K.

Checking function and voltage supply

Note:

Check whether a coded radio is installed as during the forthcoming work sequences the battery earth strap must be disconnected. Obtain radio code first if necessary.

Caddy Van:

- Lift front right section of load area floor covering.
- Remove right-hand load compartment floor panel.

=> General body repairs; Repair group 70; Removing and installing load compartment floor panel (Caddy)
Removing and installing load compartment floor panel (Caddy)

- Remove floor cover.

Caddy Kombi, Polo Classic, Polo Estate:

- Fold rear seat forwards.
- Remove floor cover.

When the floor cover is removed:

Briefly operate starter. Fuel pump must be heard to run briefly -approx. 1 second-.

If the fuel pump does not run:

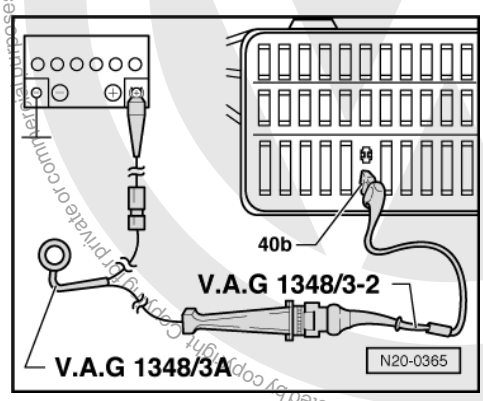

- Switch off ignition.
- Remove cover in front of fuse holder.
- Pull fuse No. 40 out of fuse holder.

satelettronica

- -> Connect remote control V.A.G 1348/3A with adapter cable V.A.G 1348/3-2 at contact 40b to fuel pump and battery positive (+).
- Operate remote control.

Fuel pump runs:

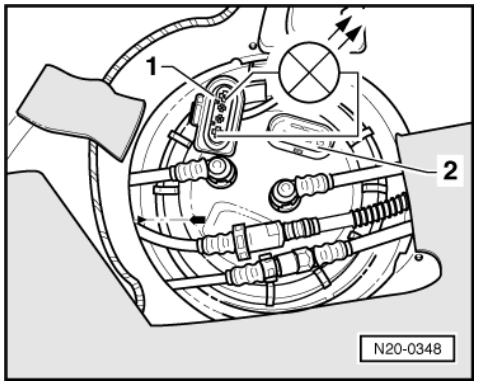

- Check activation of fuel pump relay:

=> Current flow diagrams, Electrical fault finding and Fitting locations

Fuel pump does not run:

- -> Pull 4-pin connector -1- off fuel tank flange -2-.

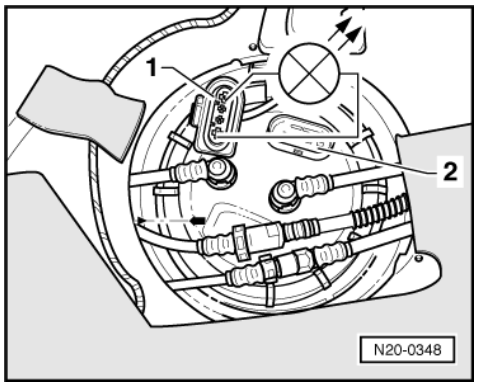

- -> Connect diode test lamp V.A.G 1527 using adapter cables from V.A.G 1594 to the outer contacts of the connector.
- Operate remote control.
  LED must light up

LED does not light up:

- Locate and eliminate open circuit using current flow diagram

LED lights up (voltage supply OK.):

- Fit spanner 3217 on the three rounded ribs of union nut and unscrew union nut from flange.
- Check that the electrical wires between flange and fuel pump are connected.

If not open circuit can be found:

- Fuel pump defective, renew fuel delivery unit =>Page 125 , Removing and installing fuel delivery unit.

Checking delivery rate

Test conditions

- The voltage supply for the fuel pump OK.

Protected by copyright. Copying for private or commercial purposes, in part or in whole, is not permitted unless authorised by Volkswagen AG. Volkswagen AG does not guarantee or accept any liability with respect to the correctness of information in this document. Copyright by Volkswagen AG.
satelletronica

- Remote control V.A.G 1348/3A is still connected.

Test sequence

- Remove filler cap from fuel tank filler neck.

Warning!
Fuel supply lines are under pressure! Before removing from hose connection wrap a cloth around the connection. Then release pressure by carefully pulling hose off connection.

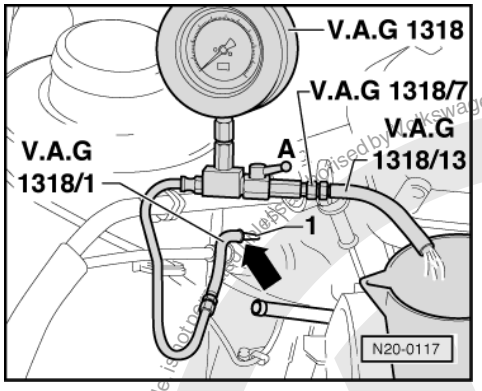

- -> Pull fuel supply hose (white marking) off fuel supply pipe -1-.
- Connect pressure gauge V.A.G 1318 with adapter /1 to fuel supply pipe.
- Screw adapter hose /13 with adapter /7 to pressure gauge and hold hose in measuring container.
- Open the pressure gauge shut-off tap. The lever then points in the direction of flow -A-.
- Operate remote control V.A.G 1348/3A and slowly close cut-off tap, until pressure gauge shows
  3 bar.
  From this point on do not move position of cut-off tap.
- Empty the measuring container.
- The fuel pump delivery range is dependent upon battery voltage. Therefore connect the multimeter with adapter cables from V.A.G 1594 to the vehicle battery.
- Operate remote control for
  30 seconds
  and measure battery voltage

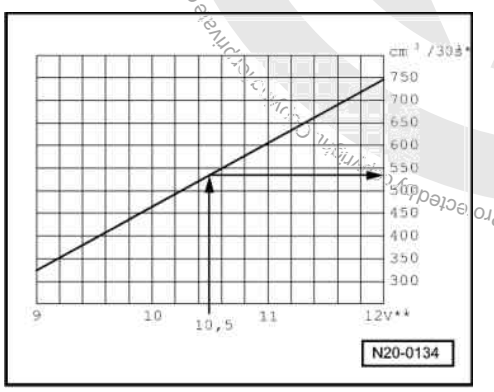

- -> Compare the quantity of fuel delivered with specification.

  *) Minimum delivery cm3/30 seconds

  **) Voltage at fuel pump with engine stopped and pump running (approx. 2 volts less than battery voltage).

Example:

During the test, a voltage of 12.5 volts is measured at the battery. As the voltage at the pump is approx. 2 volts less than the battery voltage, this will equate to a minimum delivery of 540 cm3/30 s.

Protected by copyright. Copying for private or commercial purposes, in part or in whole, is not permitted unless authorised by Volkswagen AG. Volkswagen AG does not guarantee or accept any liability with respect to the correctness of information in this document. Copyright by Volkswagen AG.
satelettronica

If the minimum delivery rate is not attained:

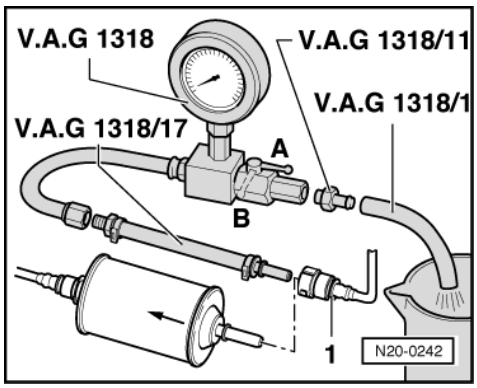

- Check the fuel pipes for possible restrictions (kinks) or blockages.
- -> Pull supply hose -1- off inlet to fuel filter.
- Connect pressure gauge V.A.G 1318 with adapter 1318/17 to fuel supply pipe.
- Repeat delivery rate check.

If the minimum delivery rate is now attained:

- Replace the fuel filter.

If the minimum delivery rate is again not attained:

- Remove the fuel delivery unit and check the strainer filter for soiling.

Only when up to now no fault has been detected:

- Fuel pump defective, renew fuel delivery unit =>Page 125 , Removing and installing fuel delivery unit.

If the delivery rate has been attained but nevertheless you suspect a fuel supply system fault (e.g. intermittent failure of fuel supply system):

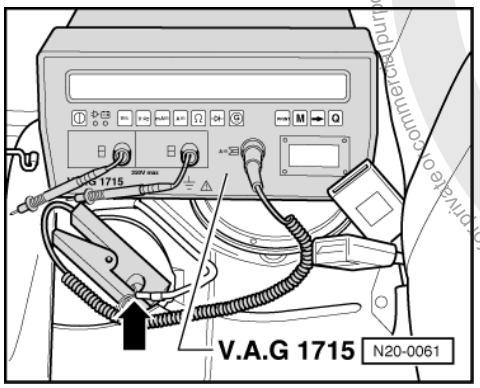

- Check the current draw of the fuel pump as follows:
- Reconnect all disconnected fuel pipes.
- -> Connect the multimeter V.A.G 1715 using the current clamp to the red/yellow wire from wiring harness.
- Start the engine and run at idling speed.
- Measure the current draw of the fuel pump.
  Specification: max. 8 amps.

Note:

If the fuel system malfunction is intermittent, you can perform the check during a test drive with the help of a 2nd person.

If the current draw is exceeded:

- Fuel pump defective, renew fuel delivery unit =>Page 125 , Removing and installing fuel delivery unit.

Protected by copyright. Copying for private or commercial purposes, in whole or in part, is not permitted unless authorised by Volkswagen AG. Volkswagen AG does not guarantee or accept any liability with respect to the correctness of information in this document. Copyright by Volkswagen AG.
satelettronica

Checking fuel pump non-return valve

Test conditions

- Remote control V.A.G 1348/3A is still connected.
- Pressure gauge V.A.G 1318 is still connected.

Test sequence

Note:

With this check the fuel supply pipe connections from the fuel delivery unit to the point at which the pressure gauge V.A.G 1318 is connected will be checked for leaks at the same time.

- Close pressure gauge cut-off tap (lever at right angle to direction of flow).
- Operate remote control at short intervals until a pressure of
  3 bar
  has built up.

Warning! Danger of spray when opening the shut-offtap, hold container over the free connection of the pressure gauge.

- If pressure builds up too high, lower excess pressure by carefully opening the shut-off tap.
- Watch pressure drop. After 10 minutes the pressure must not drop below
  2 bar.

If the pressure drops further:

- Check pipe connections for leaks.

If no fault is detected in the wiring:

- Fuel pump defective, renew fuel delivery unit =>Page 125 , Removing and installing fuel delivery unit.

Protected by copyright. Copying for private or commercial purposes, in part or in whole, is not permitted unless authorised by Volkswagen AG. Volkswagen AG does not guarantee or accept any liability with respect to the correctness of information in this document. Copyright by Volkswagen AG.
satelettronica

2 - Checking electronic power control (EPC)

2.1 - Checking electronic power control (EPC)

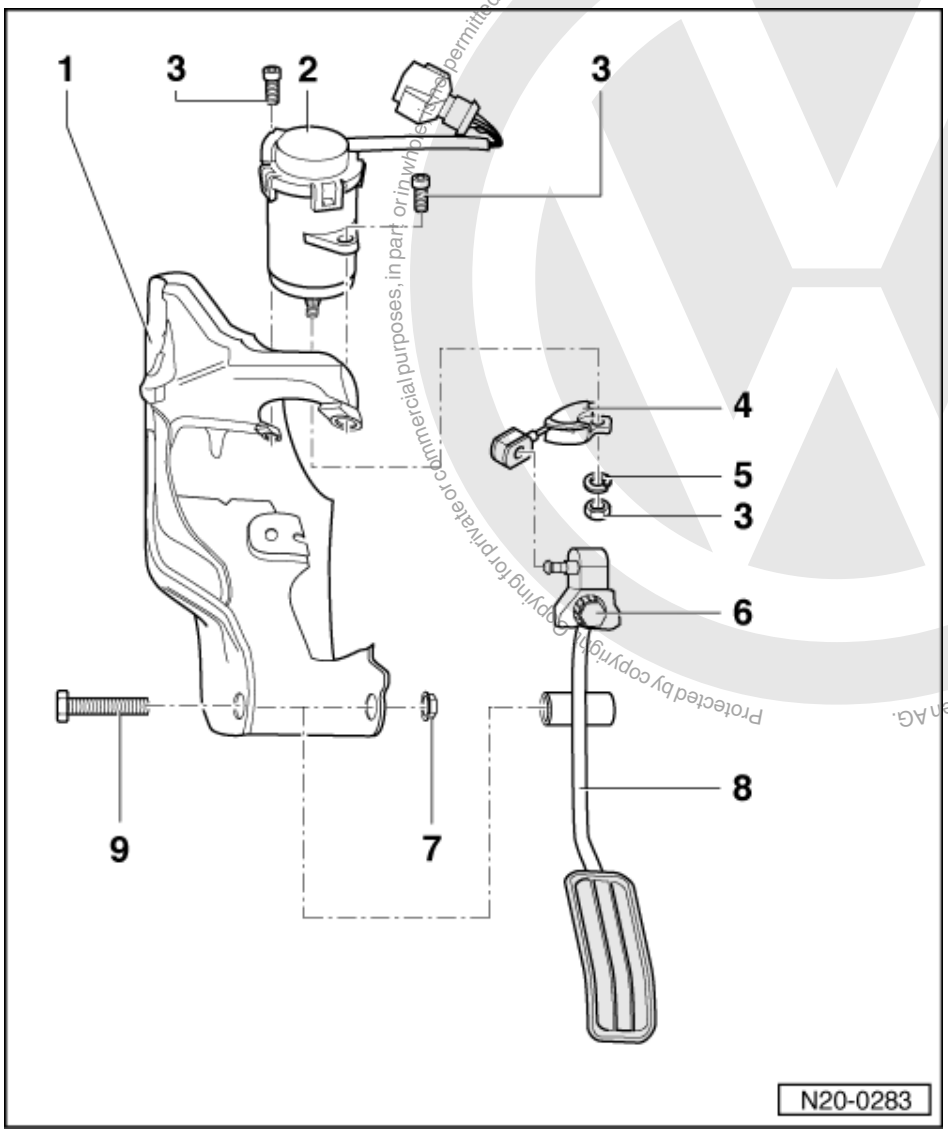

1 Bracket
- Removing and installing

=> Running gear; Repair group 46; Brake, Assembly overview brake mechanism, brake pedal/mounting bracket Brake, Assembly overview brake mechanism, brake pedal/mounting bracket

2 Accelerator pedal position sender (G79 and G185)
- Checking =>Page 139
- When removing remove dash panel and pedal cluster cover

3 10 Nm

4 Cable cam
- Installing
  =>Page 137 , Fig. 1

5 Spring washer

Protected by copyright. Copying for private or commercial purposes, in part, or in whole, is not permitted unless authorised by Volkswagen AG. Volkswagen AG does not guarantee or accept any liability with respect to the correctness of information in this document. Copyright by Volkswagen AG.
satelettronica

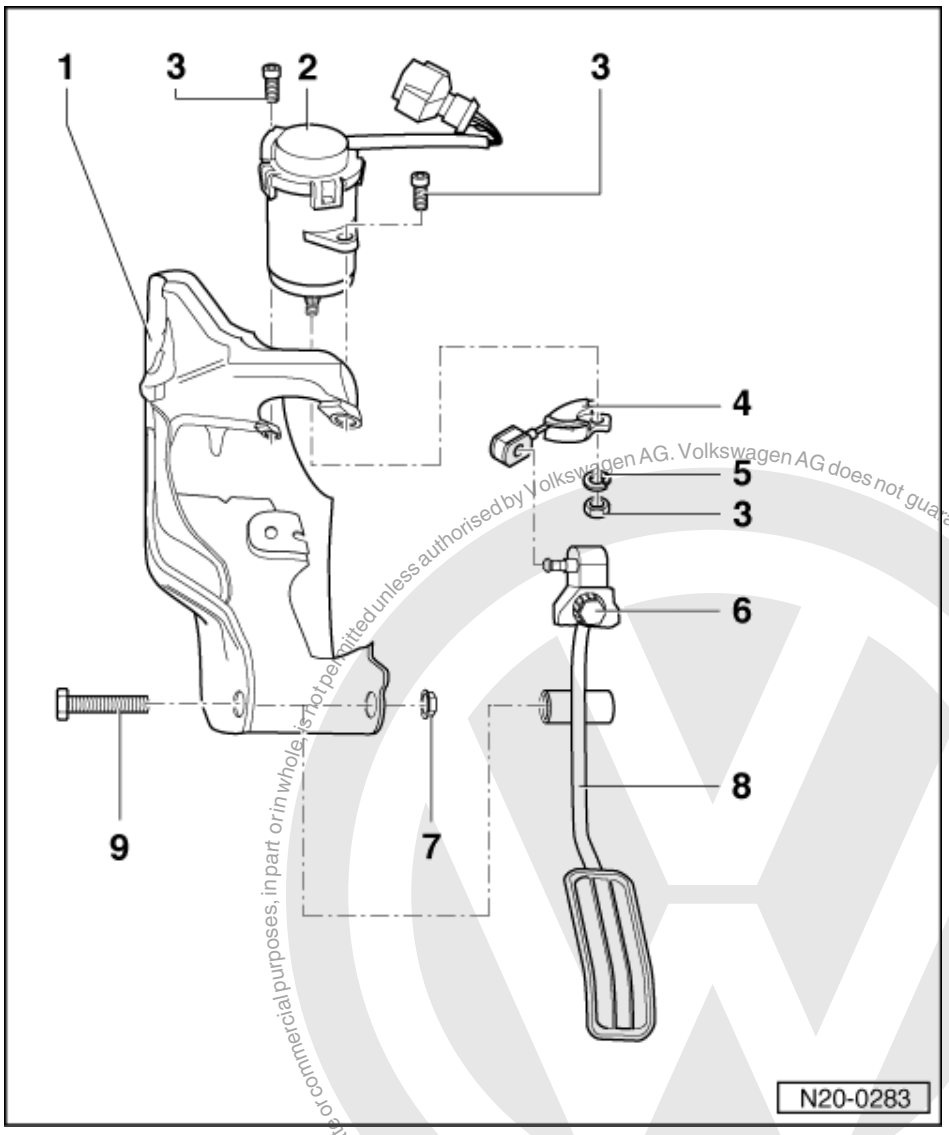

6 Adjustment bolt
7 20 Nm
8 Accelerator pedal
9 Hexagon bolt M8

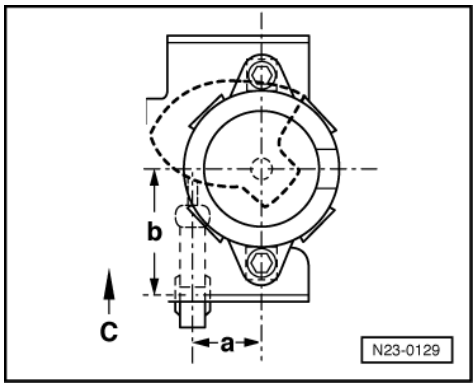

-> Fig.1 Installing cable cam

- Secure cable cam to sender so that the dimensions shown are adhered to when facing forwards.
  a = 22 ±0.05 mm
  b = 41±0.05 mm

Protected by copyright. Copying for private or commercial purposes, in part or in whole is not permitted unless authorised by Volkswagen AG. Volkswagen AG does not guarantee or accept any liability with respect to the correctness of information in this document. Copyright by Volkswagen AG.
satelettronica

c = Forwards

Note:

The cable cam eye must be parallel to the forward direction.

2.2 - Function of EPC system

With the EPC system the throttle valve is not operated by a cable. There is no mechanical connection between accelerator and throttle valve.

The position of the accelerator is transmitted to the engine control unit by two accelerator position senders (variable resistors together in a housing) which are connected to the accelerator pedal.

The position of the accelerator (drivers requirement) is the main input value for the engine control unit.

The throttle valve is operated over the complete revolution and load range by an electric motor (throttle valve positioner) in the throttle valve control part.

The throttle valve is operated by the throttle valve positioner which is controlled by the engine control unit.

When the engine is running (under load) the engine control unit can open or close the throttle valve independently of the accelerator pedal position sender.

This means that the throttle valve can already be completely open even though the accelerator pedal is depressed half way.

This also gives vastly improved consumption and exhaust emission levels at certain load conditions.

The torque required by the engine can be produced by the engine control unit by optimising the combination of throttle valve cross-section and intake manifold pressure.

It is incorrect to believe that the "EPC" is comprised of one or two components only. The EPC is a system, which is comprised of all components which have an influence, control or monitor the position of the throttle valve, e.g. the accelerator pedal position sender, the throttle valve control unit, the EPC warning lamp, the engine control unit.

- Functional test of EPC warning lamp:

=> Repair group 01; General to self-diagnosis; Significance of EPC warning lamp (fault lamp for electronic throttle operation) in dash panel insert. General to self-diagnosis Significance of EPC warning lamp (fault lamp for electronic throttle operation) in dash panel insert.

Observe safety precautions=> Page 124 .

Observe rules for cleanliness => Page 124 .

Protected by copyright. Copying for private or commercial purposes, in whole or in part, is not permitted unless authorised by Volkswagen AG. Volkswagen AG does not guarantee or accept any liability with respect to the correctness of information in this document. Copyright by Volkswagen AG.

satelettronica

2.3 - Checking accelerator pedal position sender

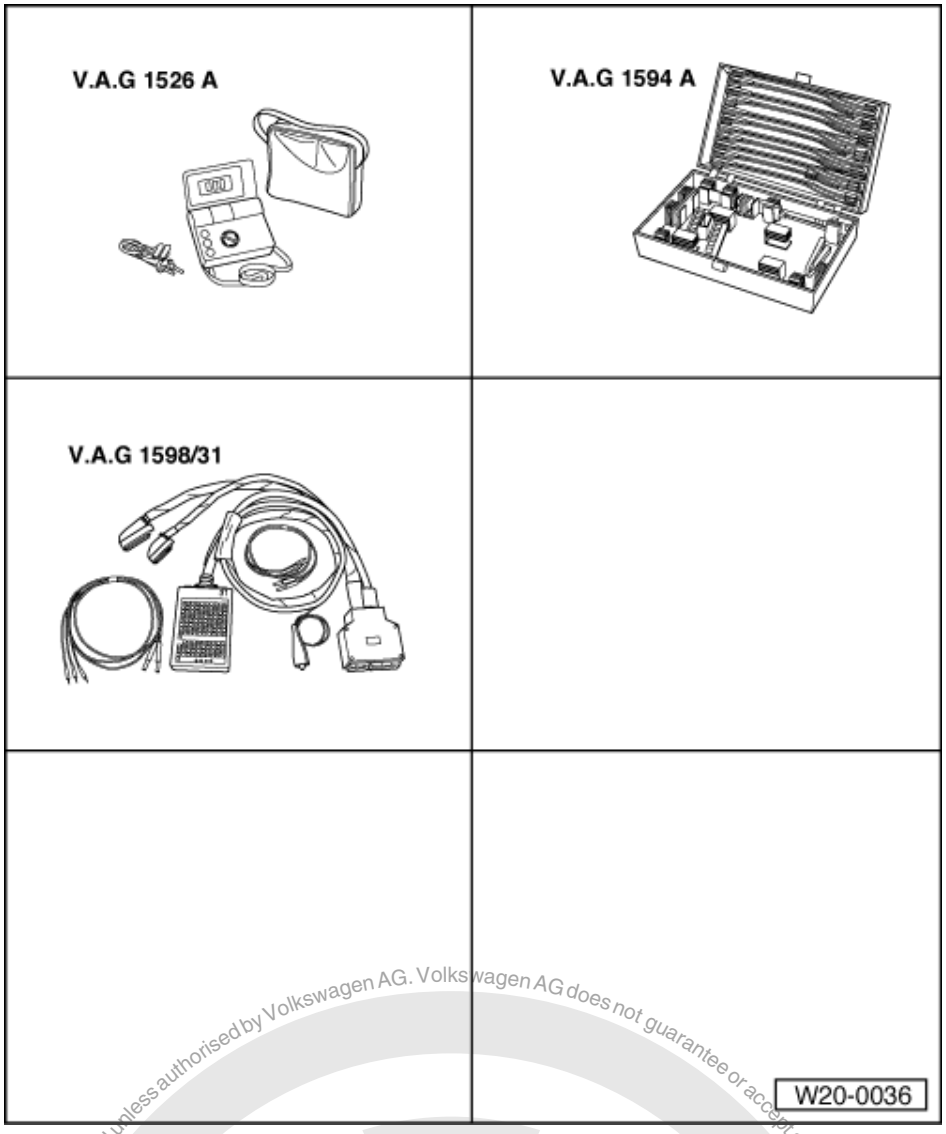

Special tools, workshop equipment, test and measuring appliances and auxiliary items required

- V.A.G 1526 Hand multimeter
- V.A.G 1594 A Adapter set
- V.A.G 1598/31 Test box
- Fault reader V.A.G 1551 or vehicle system tester V.A.G 1552 with cable V.A.G 1551/3
- Current flow diagram

Function

Both accelerator pedal position senders -G79- and -G185- on the accelerator pedal pass the driver's requirements on to the engine control unit independently of one another. Both senders are installed together in a housing.

Test conditions

- The battery voltage must be at least 11.5 V.

Test sequence

- Connect fault reader V.A.G 1551 (V.A.G 1552) and with ignition switched on select engine electronics control unit with the "Address word" 01:

Protected by copyright. Copyright by Volkswagen AG. Volkswagen AG does not guarantee or accept any liability with respect to the correctness of information in this document. Copyright by Volkswagen AG. Reproduction in part or in whole is not permitted unless authorised by Volkswagen AG.
satelettronica

=> Repair group 01; Self-diagnosis; Connecting fault reader V.A.G 1551 and selecting engine electronics control unit Self-diagnosis Connecting fault reader V.A.G 1551 and selecting engine electronics control unit

-> Indicated on display:

```
Rapid data transfer      HELP
Select function XX
```

- Press keys 0 and 8 for the function "Read measured value block" and confirm entry with Q key.

-> Indicated on display:

```
Read measured value block      HELP
Input display group number XXX
```

- Press keys 0, 6 and 2 for the "Display group number 62" and confirm entry with Q key.

-> Indicated on display:
(1...4 = Display zones)

```
Read measured value block 62
     1     2     3     4
```

- Check specifications of sender 1 (G79) at idling stop in display zone 3.
  Specification: 3...100 %
- Check specifications of sender 2 (G185) at idling stop in display zone 4.
  Specification: 3...100 %

Note:

The engine control unit calculates the voltage values of the angle sender in percent relative to 5 Volt and displays these as a percentage figure (5 Volt supply voltage equates to 100 %).

- Operate the accelerator pedal slowly until fully depressed and observe the angle sender figures in display zones 3 and 4:

  The percentage display in display zone 3 and 4 must rise evenly. The tolerance range of 3...100 % is not covered completely.

End specification value not achieved:

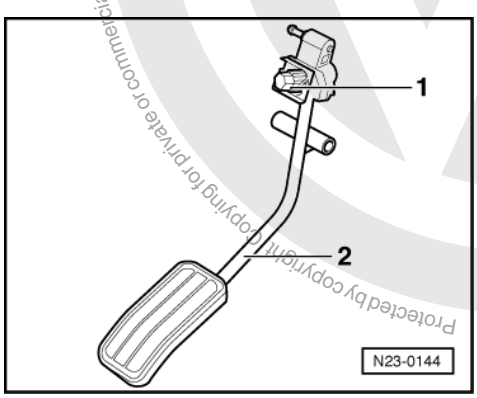

- -> If necessary, adjust accelerator pedal -2- with adjusting bolt -1-.

End specification value not achieved:

- Press the ⇒key.
- Press keys 0 and 6 for the function "End output" and confirm entry with the Q key.
- Switch off ignition.

If the display does not indicate as described:

- Check accelerator pedal position sender voltage supply and wiring connections =>Page 141 .

Protected by copyright. Copying for private or commercial purposes, in part or in whole, is not permitted unless authorised by Volkswagen AG. Volkswagen AG does not guarantee or accept any liability with respect to the correctness of information in this document. Copyright by Volkswagen AG.
satelettronica

Checking voltage supply and wiring to control unit

- Remove driver's stowage compartment:

=> General body repairs; Repair group 68; Dash panel; Removing driver's stowage compartment Dash panel Removing driver's stowage compartment

- Disconnect 6-pin connector for accelerator pedal position sender.
- Switch ignition on.

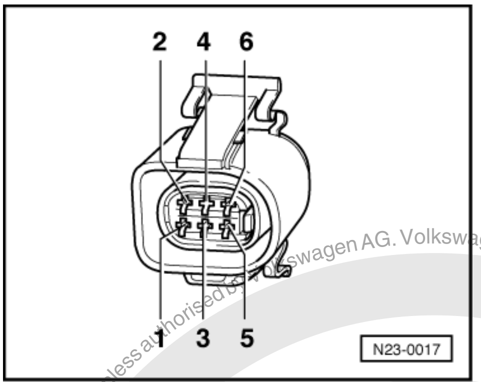

- -> Connect multimeter to measure voltage at the following contacts of the connector:
  Contact 2 + earth
  Contact 2 + 3
  Contact 5 + earth
  Contact 5 + 4
  Specification: minimum 4.5 V

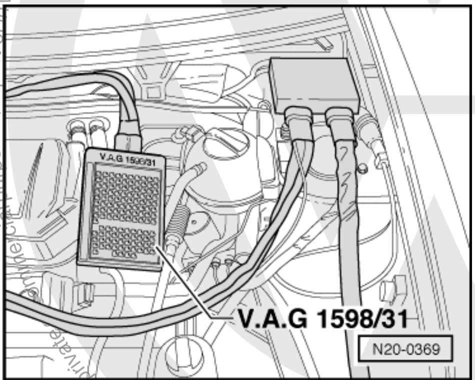

- Switch off ignition.

If the specifications are not obtained:

- -> Connect test box V.A.G 1598/31 to control unit wiring harness. The engine control unit remains disconnected.

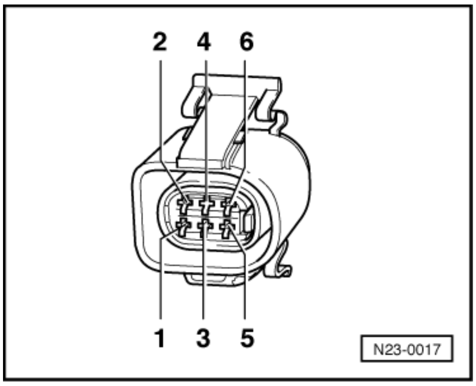

Protected by copyright. Copying for private or commercial purposes, in part or in whole, is not permitted unless authorised by Volkswagen AG. Volkswagen AG does not guarantee or accept any liability with respect to the correctness of information in this document. Copyright by Volkswagen AG.

satelettronica

- -> Check wiring between test box and connector for open circuit according to current flow diagram.
  Contact 1+ socket 35
  Contact 2+ socket 73
  Contact 3+ socket 36
  Contact 4+ socket 33
  Contact 5+ socket 72
  Contact 6+ socket 34
  Wire resistance: max. 1.5 ω
- Additionally check the wiring for short to battery positive or earth.
- Additionally check wires for short to one another.

If no fault is detected in the wiring:

- Renew accelerator pedal position sender
  => Page 136 , item 2

3 - Activated charcoal filter system

3.1 - Activated charcoal filter system

3.2 - Function

Depending upon the air pressure and ambient temperature, fuel vapour will form above the level of fuel in the tank.

The activated charcoal filter system prevents these HC emissions escaping to the atmosphere.

In limited quantities, fuel vapours pass through a gravity valve (which closes at an angle of 45 °) located at the highest point in the tank and through a pressure retention valve into the activated charcoal filter.

The activated charcoal stores these vapours like a sponge.

When the Lambda control is active when driving (engine warm), the solenoid valve (N80, also called regeneration valve), is activated (pulsed) from engine control unit depending upon load and engine speed. The opening period is dependent on the input signals.

Intake manifold vacuum draws fresh air through the vent opening on the underside of the activated charcoal filter during the purging procedure (regenerating the activated charcoal). The fuel vapours stored in the activated charcoal and fresh air are pulse-fed for combustion.

The pressure retention valve prevents fuel vapours from being drawn from the tank when the solenoid valve is open and intake manifold vacuum is present. It therefore ensures that the evacuation of the activated charcoal filter has priority.

No voltage (e.g. wiring open circuit) the solenoid valve is closed and the activated charcoal filter will not be purged.

Notes:

- Hose connections are secured with either spring-type or clamp-type clips.
- Always replace clamp-type clips with spring-type clips.
- For fitting the spring-type clips, assembly tool VAS 5024 is recommended.

Observe safety precautions=> Page 124 .

Observe rules for cleanliness => Page 124 .

satelettronica

3.3 - Servicing parts of the activated charcoal filter system

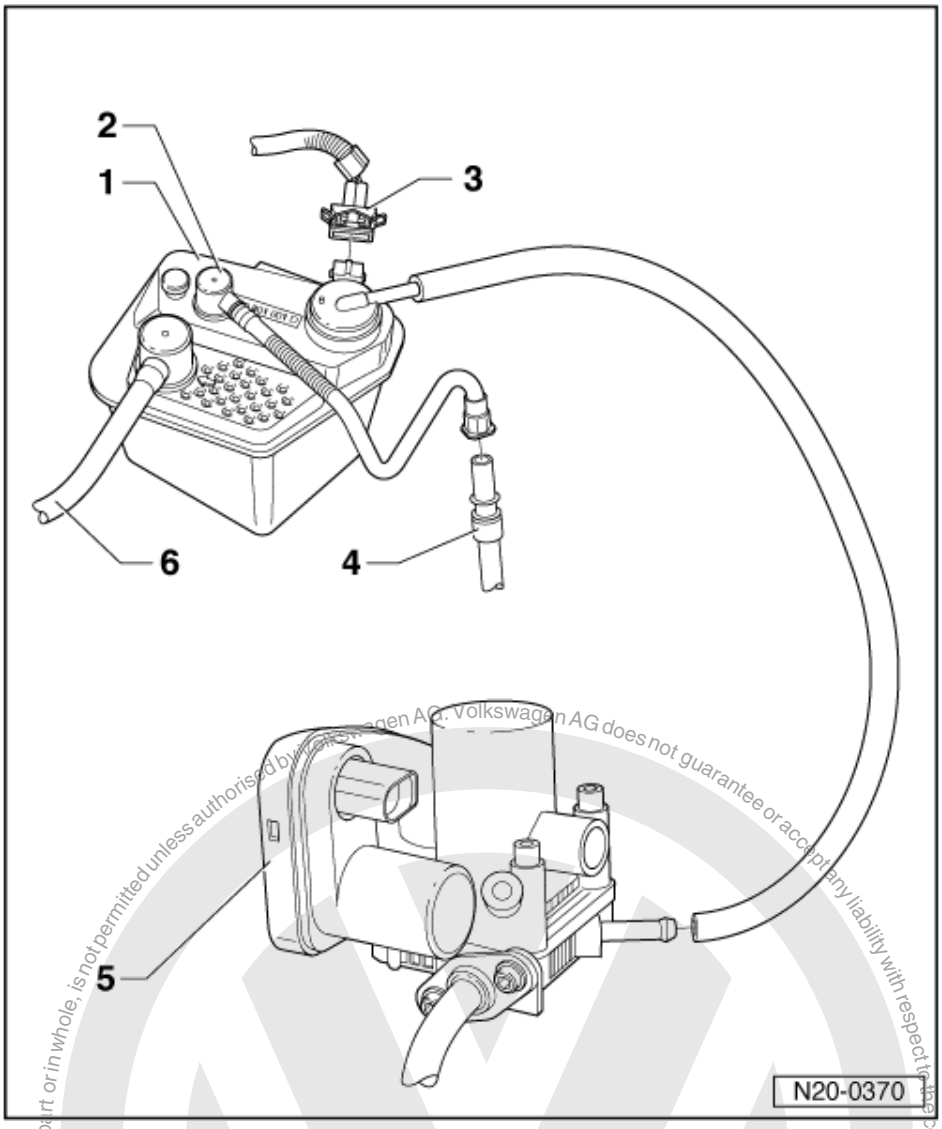

1 Activated charcoal filter
- Location: in engine compartment, right
- Secured to body
- With solenoid valve 1 for activated charcoal filter (N80)
- When the engine is warm the valve will be activated from the engine control unit (pulsed)
- Checking:

=> Repair group 01; Final control diagnosis; Performing final control diagnosis Final control diagnosis Performing final control diagnosis

2 Pressure retention valve with connecting hose
- Shuts-off the tank venting when the solenoid valve (N80) is open and intake manifold pressure is present

3 Connector
- 2-pin
- For solenoid valve 1

satelettronica

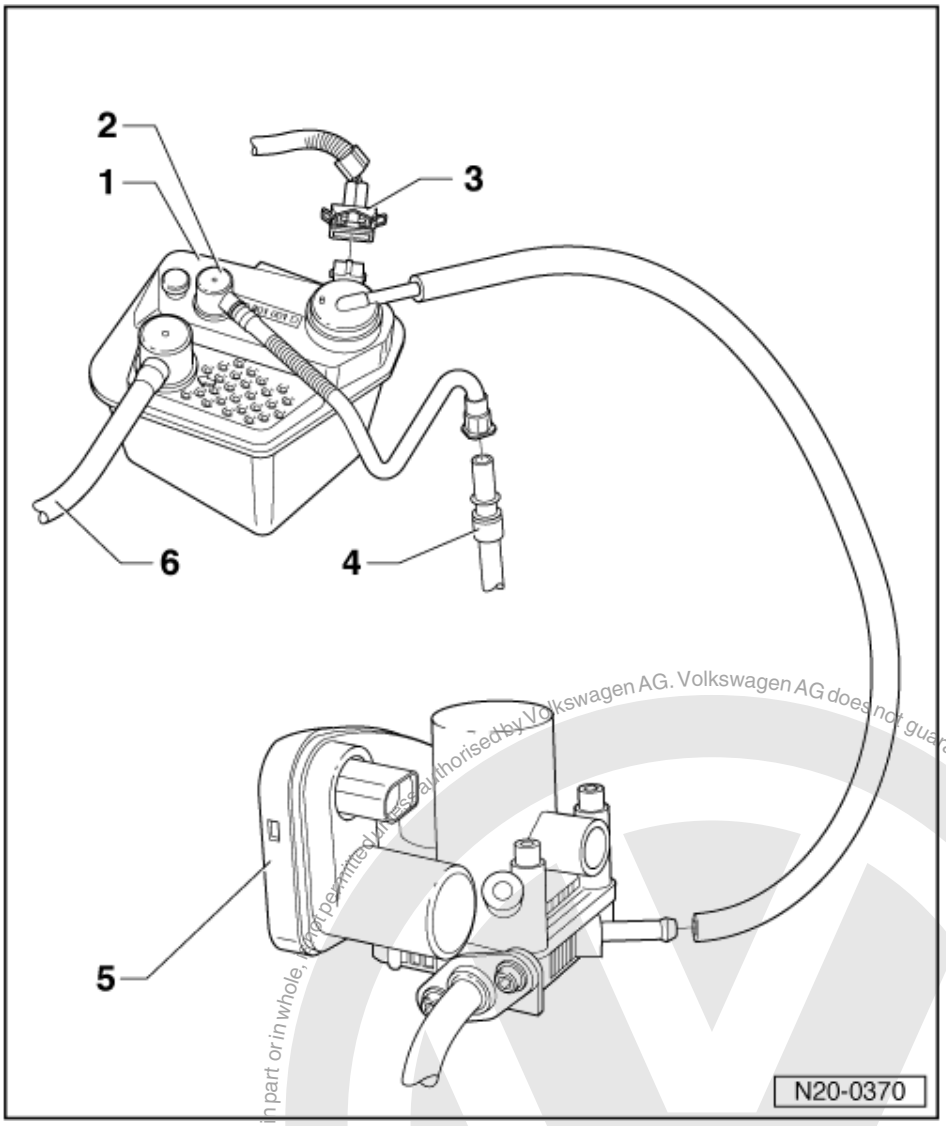

4 Breather pipe
- Check securely seated
- From gravity/overflow valve on fuel tank
  => Page 117 , item 18

5 Throttle valve control part

6 Vent pipe

Protected by copyright. Copying for private or commercial purposes, in part or in whole, is not permitted unless authorised by Volkswagen AG. Volkswagen AG does not guarantee or accept any liability with respect to the correctness of information in this document. Copyright by Volkswagen AG.
satelettronica

3.4 - Checking fuel tank breather

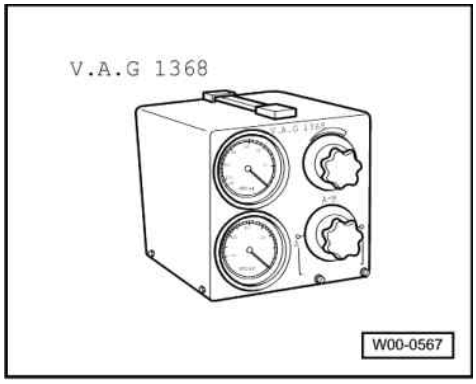

Special tools, workshop equipment, testers, measuring instruments and auxiliary items required

- V.A.G 1368 Vacuum tester

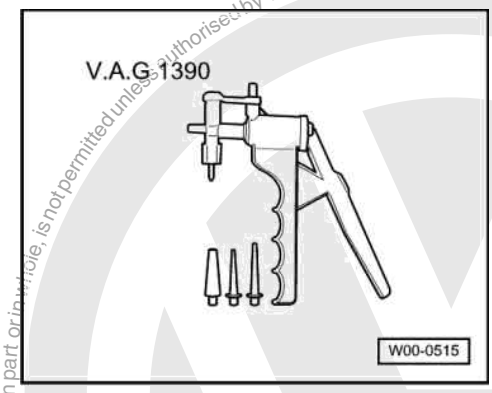

- V.A.G 1390 Hand vacuum pump

Test conditions

- Ignition must be switched off

Test sequence

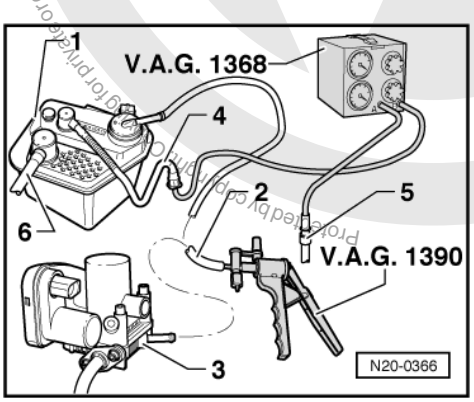

- -> Pull breather pipe/hose -2- from activated charcoal filter -1- off at throttle valve control part -3-.
- Connect hand vacuum pump V.A.G 1390 to pipe/hose -2-.
- Pull breather pipe/hose -5- from fuel tank off activated charcoal filter and connect to -connection A- of vacuum tester V.A.G 1368.
- Connect vacuum tester V.A.G 1368 -connection B- to breather pipe/hose -4-.
- Set vacuum tester to position -B-.
- Introduce final control diagnosis and select activated charcoal filter solenoid valve (N80):

Protected by copyright. Copying for private or commercial purposes, in part or in whole, is not permitted unless authorised by Volkswagen AG. Volkswagen AG does not guarantee or accept any liability with respect to the correctness of information in this document. Copyright by Volkswagen AG.
satelettronica

=> Repair group 01; Final control diagnosis; Performing final control diagnosis Final control diagnosis Performing final control diagnosis

- Operate hand vacuum pump V.A.G 1390 several times.
  Vacuum must not
  build up.

If vacuum builds up:

- Check breather connection -6- on activated charcoal filter -1- for soiling, clean if necessary.

If vacuum does not build up:

- Remove fuel filler cap.

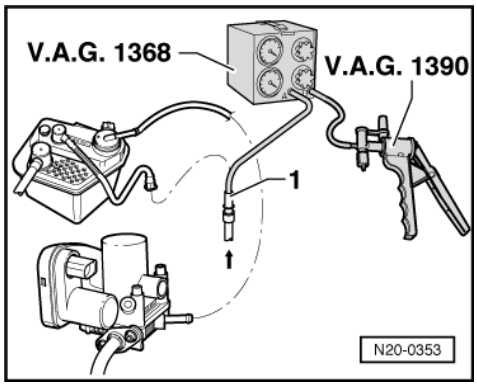

- -> Connect hand vacuum pump V.A.G 1390 to vacuum tester V.A.G 1368 -connection B-.
- Set vacuum tester to -A/B- position.
- Operate V.A.G 1390 several times. Vacuum must
  not build-up.

If vacuum builds-up:

- Check gravity/overflow valve => Page 114 , item 4
- Check pipe/hose -1- from fuel tank for blockage.

If vacuum does not build up:

- Refit fuel filler cap.
- Operate hand vacuum pump V.A.G 1390 several times.
  Vacuum must not
  build up.

Note:

If the fuel level in the tank is low the hand vacuum must be operated at least 20...30 times.

If vacuum builds up:

- Replace fuel tank cap.

satelettronica
Protected by copyright. Copying for private or commercial purposes, in part or in whole, is not permitted unless authorised by Volkswagen AG. Volkswagen AG does not guarantee or accept any liability with respect to the correctness of information in this document. Copyright by Volkswagen AG.

26 - Exhaust system

1 - Removing and installing parts of exhaust system

1.1 - Removing and installing parts of exhaust system

Notes:

- After working on the exhaust system ensure that the system is not under stress, and that it has sufficient clearance from the bodywork. If necessary, loosen double and single clamps and align silencer and exhaust pipe so that sufficient clearance is maintained to the bodywork and the support rings are evenly loaded.
- Components marked with * will be checked by self-diagnosis:

=> Repair group 01; Fault memory; Interrogating and erasing engine control unit fault memory Fault memory Interrogating and erasing engine control unit fault memory

- Renew self-locking nuts.

Protected by copyright. Copying for private or commercial purposes, in part or in whole, is not permitted unless authorised by Volkswagen AG. Volkswagen AG does not guarantee or accept any liability with respect to the correctness of information in this document. Copyright by Volkswagen AG.
satelettronica

1.2 - Exhaust manifold, front exhaust pipe and catalyst with attachments

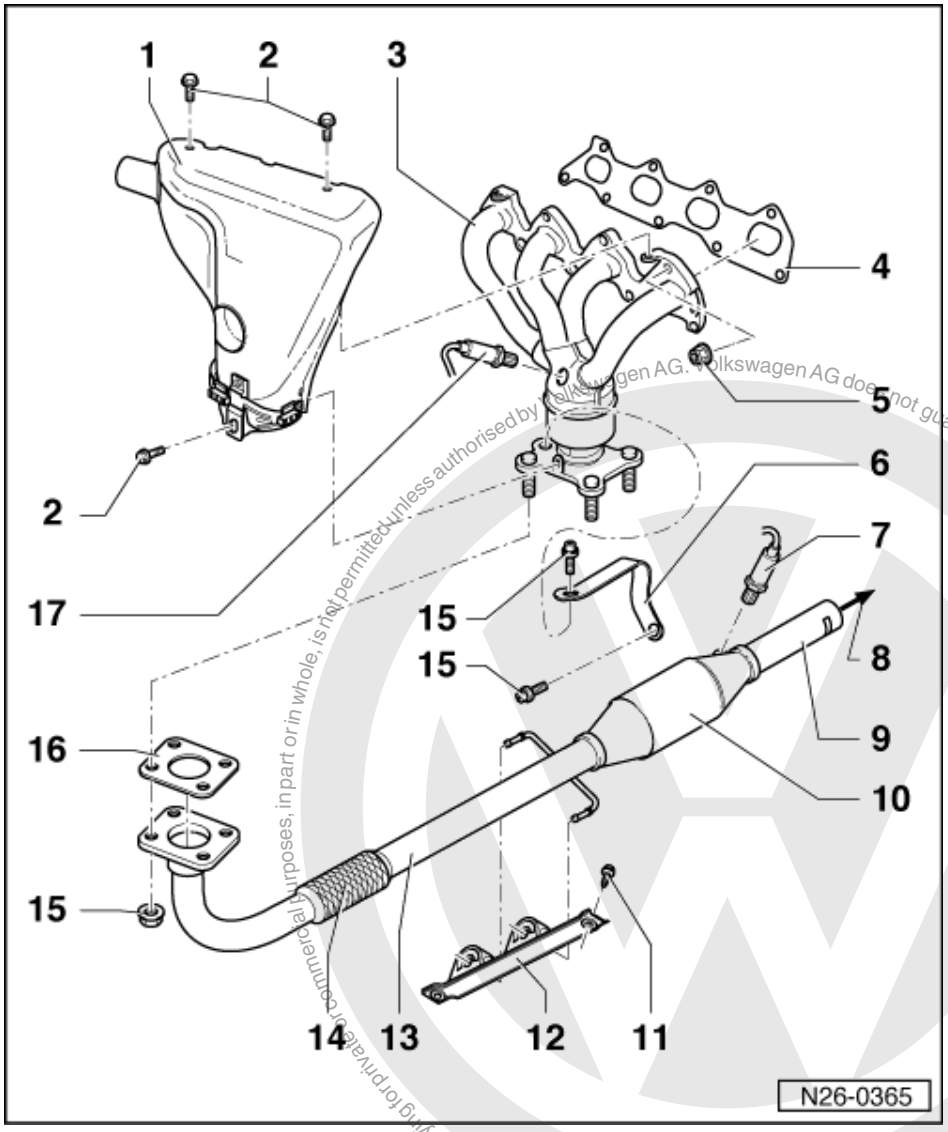

1 Warm air collector plate
2 10 Nm
- Note tightening sequence
  Page => 151 , Fig. 1

3 Exhaust manifold with precatalyst
4 Gasket
- Renew

5 Lock nut, 25 Nm
6 Bracket

Protected by copyright. Copying for private or commercial purposes, in part or in whole, is not permitted unless authorised by Volkswagen AG. Volkswagen AG does not guarantee or accept any liability with respect to the correctness of information in this document. Copyright by Volkswagen AG.
satelettronica

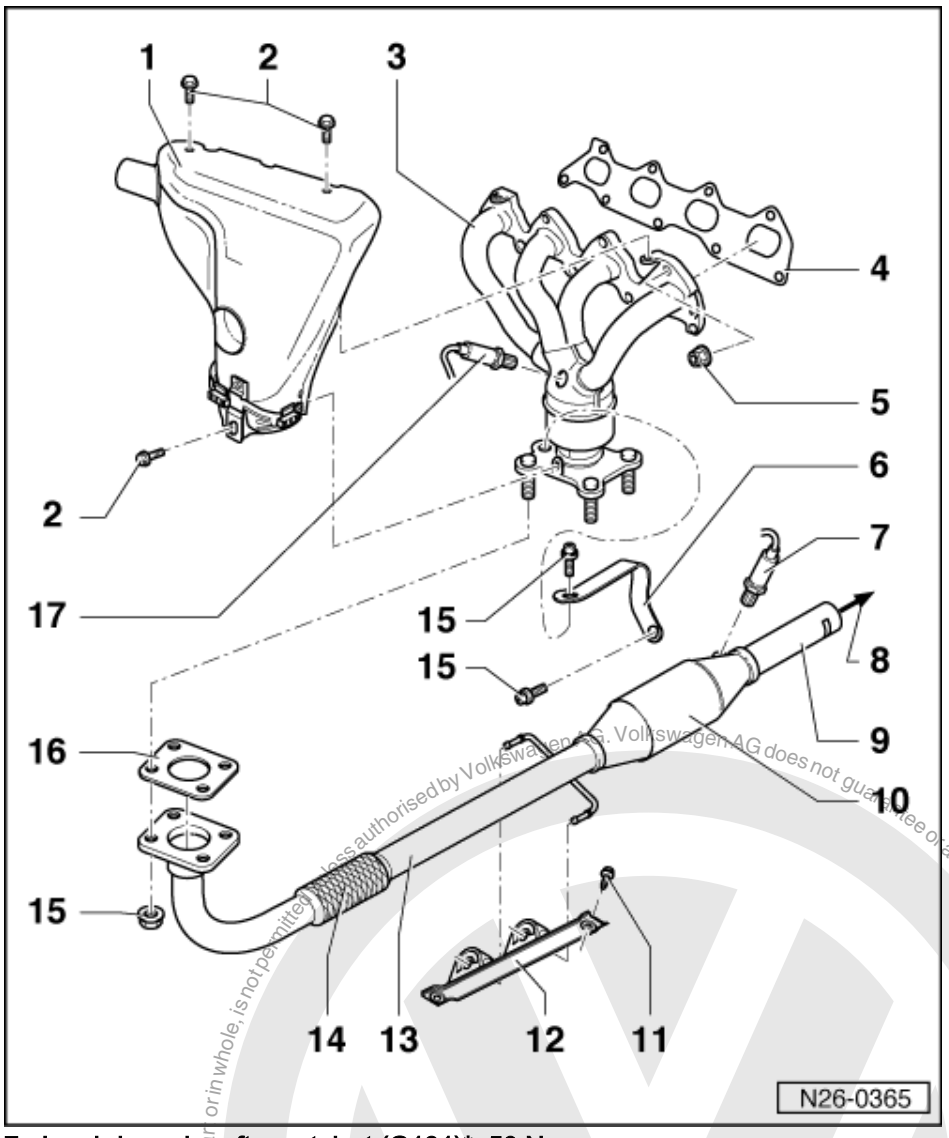

7 Lambda probe after catalyst (G131)*, 50 Nm
- Grease only the threads with "G5"; "G5" must not get into the slots on the probe body
- Remove and install with ring spanner 3337
- Checking:

=> Repair group 24; Checking function; Checking Lambda probe and Lambda regulation after catalyst Checking function Checking Lambda probe and Lambda regulation after catalyst

8 To silencer
9 Marking
- Three times on circumference

10 Main catalyst
11 25 Nm
12 Mounting
- Renew if damaged

13 Front exhaust pipe with catalyst

Protected by copyright. Copying for private or commercial purposes, in part or in whole, is not permitted unless authorised by Volkswagen AG. Volkswagen AG does not guarantee or accept any liability with respect to the correctness of information in this document. Copyright by Volkswagen AG.
satelettronica

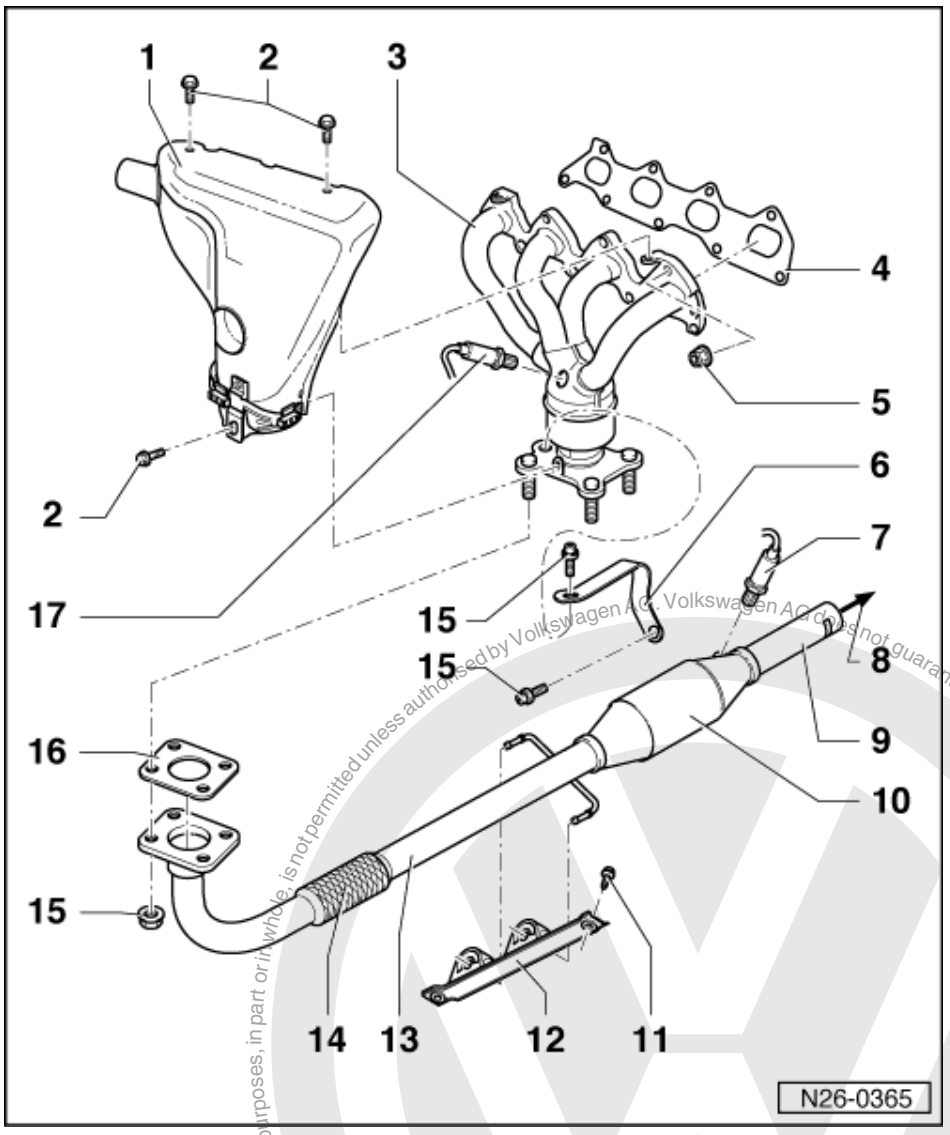

14 Flexible pipe
15 40 Nm
16 Gasket
- Renew

17 Lambda probe before catalyst (G39)*, 50 Nm
- Grease only the threads with "G5"; "G5" must not get into the slots on the probe body
- Remove and install with ring spanner 3337
- Checking:

=> Repair group 24; Checking function; Checking Lambda probe and Lambda regulation before catalyst
Checking function Checking Lambda probe and Lambda regulation before catalyst

satelettronica

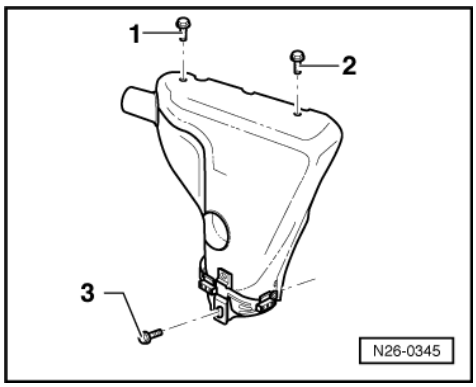

-> Fig. 1 Tightening sequence, warm air collector plate on exhaust manifold.

1 - Tighten bolt -1-, 10Nm
2 - Tighten bolt -2-, 10Nm
3 - Tighten bolts -3-, 10Nm

1.3 - Silencer with mountings

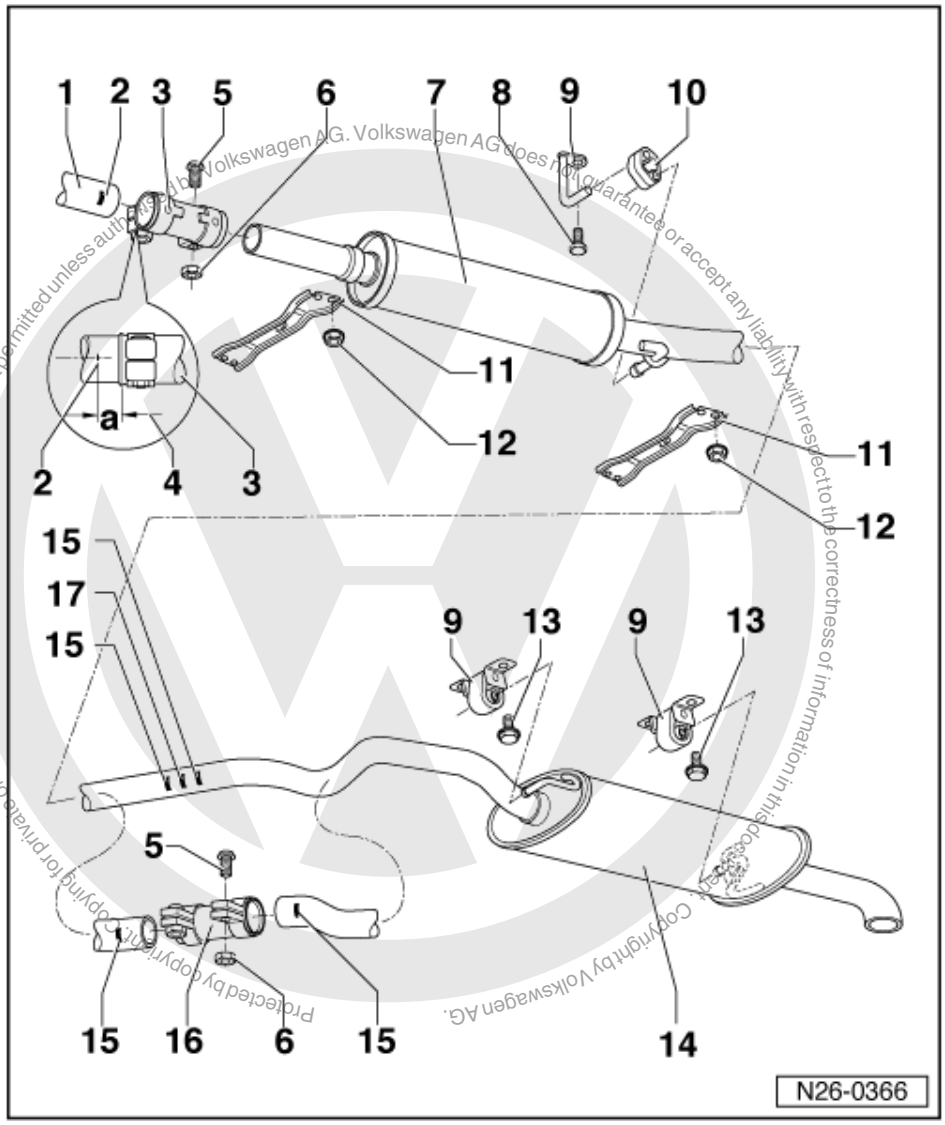

Protected by copyright. Copying for private or commercial purposes, in part or in whole, is not permitted unless authorised by Volkswagen AG. Volkswagen AG does not guarantee or accept any liability with respect to the correctness of information in this document. Copyright by Volkswagen AG.

satelettronica

1 Front exhaust pipe with catalyst
2 Marking
- Three times on circumference

3 Double clamp
4 Dimension-a- = ca. 5 mm
5 Carriage bolt
6 40 Nm
7 Front silencer1)
8 25 Nm
9 Mounting

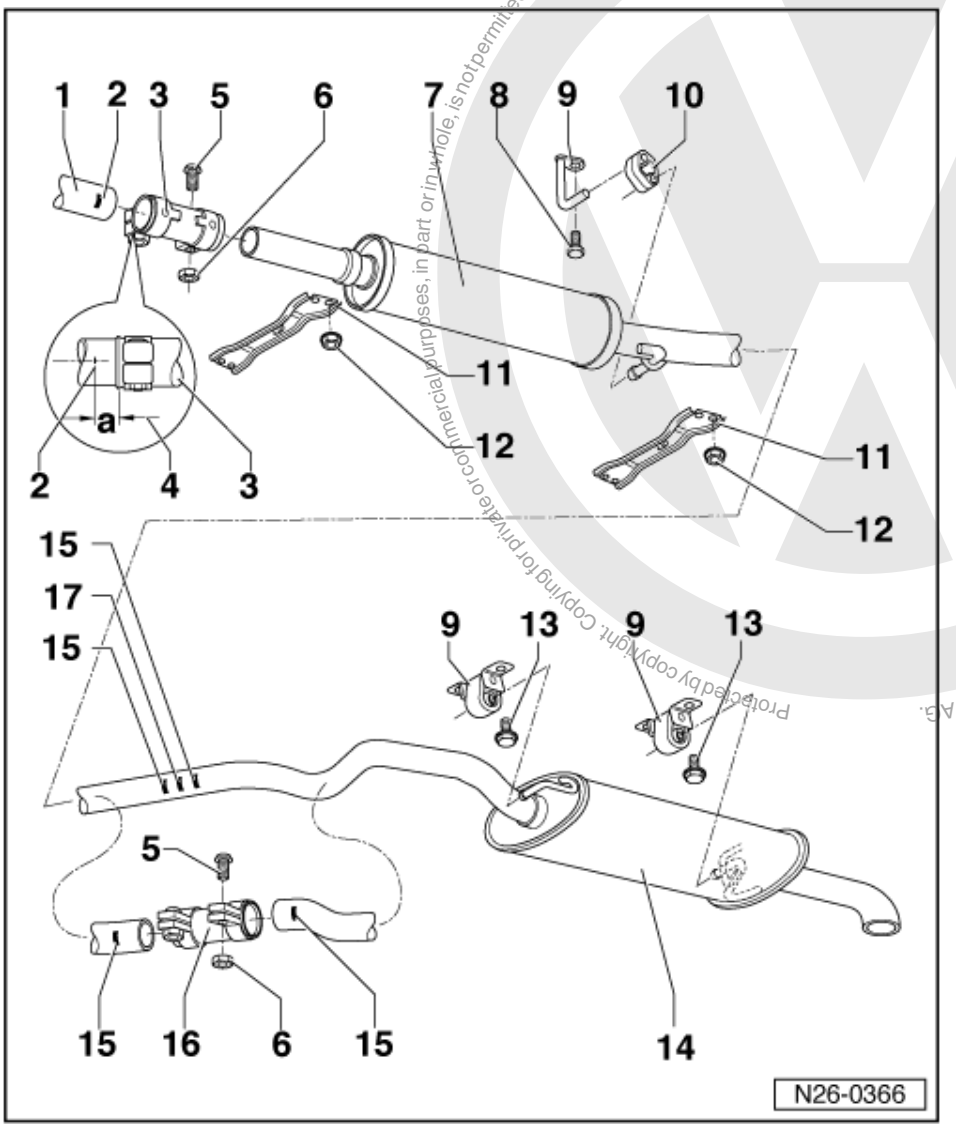

10 Mounting
- Renew if damaged

11 Connecting piece
12 15 Nm
13 20 Nm + 1/4 turn (90 °) further
14 Rear silencer1)
15 Marking
- Visible from below
- For repair double clamp item - 16 -

16 Repair double clamp

Protected by copyright. Copying for private or commercial purposes, in part or in whole, is not permitted unless authorised by Volkswagen AG. Volkswagen AG does not guarantee or accept any liability with respect to the correctness of information in this document. Copyright by Volkswagen AG.
satelettronica

- Must be pushed on to the markings item - 15 -

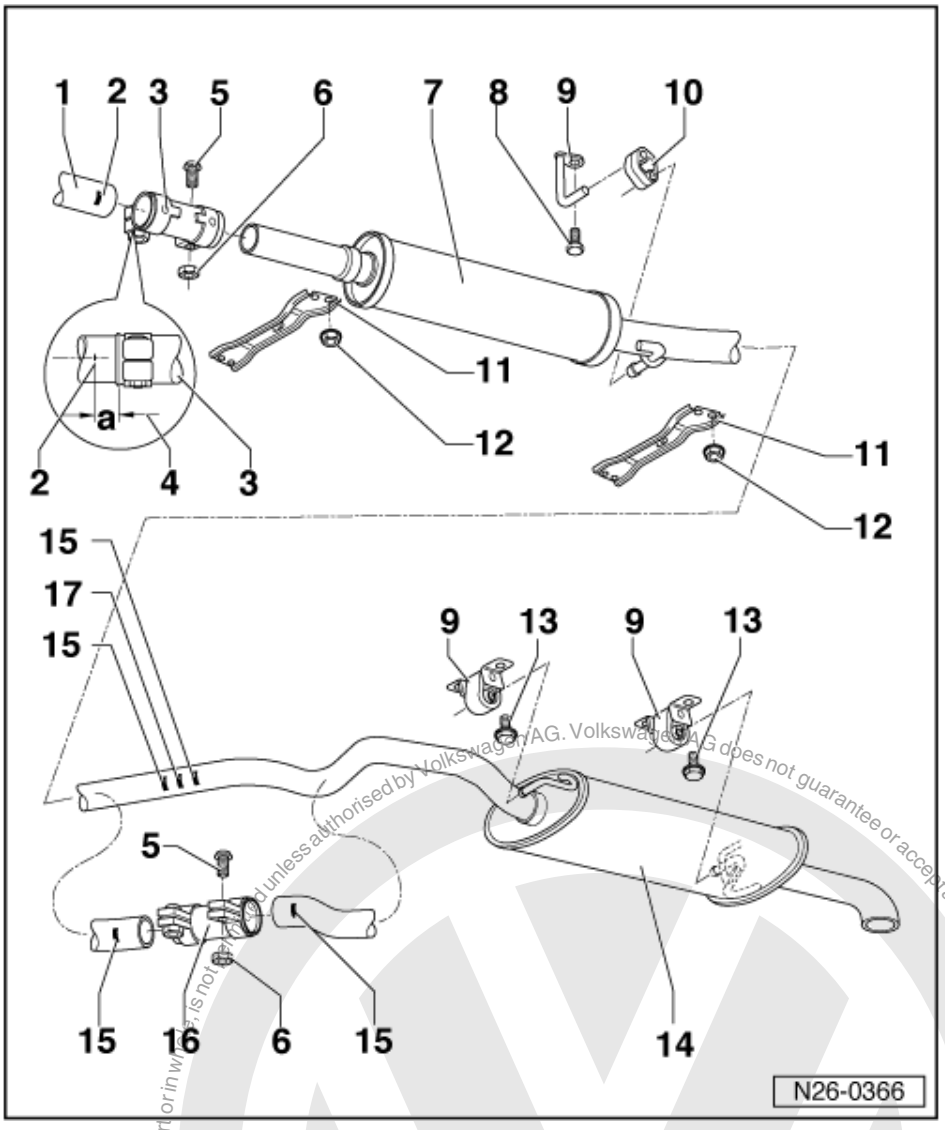

17 Separating point

- For repair cases1)
- Marked by impressions on connecting pipe

1) Front and rear silencers are installed as a single component at the factory. In repair cases the front and rear silencers are supplied individually and a repair double clamp item 16 is supplied as a joint. Cut through connecting pipe at separating point - 17 - with a body saw e.g. V.A.G 1523.

2 - Exhaust gas recirculation system

2.1 - Exhaust gas recirculation system

Notes:

- The activation of the exhaust gas recirculation system is undertaken by the engine control unit (J537) via valve for exhaust gas recirculation (N18) to exhaust gas recirculation valve.
- Checking exhaust gas recirculation valve (N18).

satelettronica
Protected by copyright. Copying for private or commercial purposes, in part or in whole, is not permitted unless authorised by Volkswagen AG. Volkswagen AG does not guarantee or accept any liability with respect to the correctness of information in this document. Copyright by Volkswagen AG.

=> Repair group 01; Final control diagnosis; Performing final control diagnosis Final control diagnosis Performing final control diagnosis

- The conical plunger in the mechanical exhaust gas recirculation valve ensures that various cross sectional openings are possible at different plunger lifts.
- Pulsed control makes every conceivable valve position possible.
- Components marked with an * are checked via the self-diagnosis.

=> Repair group 01; Fault memory; Interrogating and erasing fault memory of engine control unit Fault memory Interrogating and erasing fault memory of engine control unit

- Components marked with ** are checked via the final control diagnosis.

=> Repair group 01; Self-diagnosis; Final control diagnosis Self-diagnosis Final control diagnosis

2.2 - Servicing parts of exhaust gas recirculation system

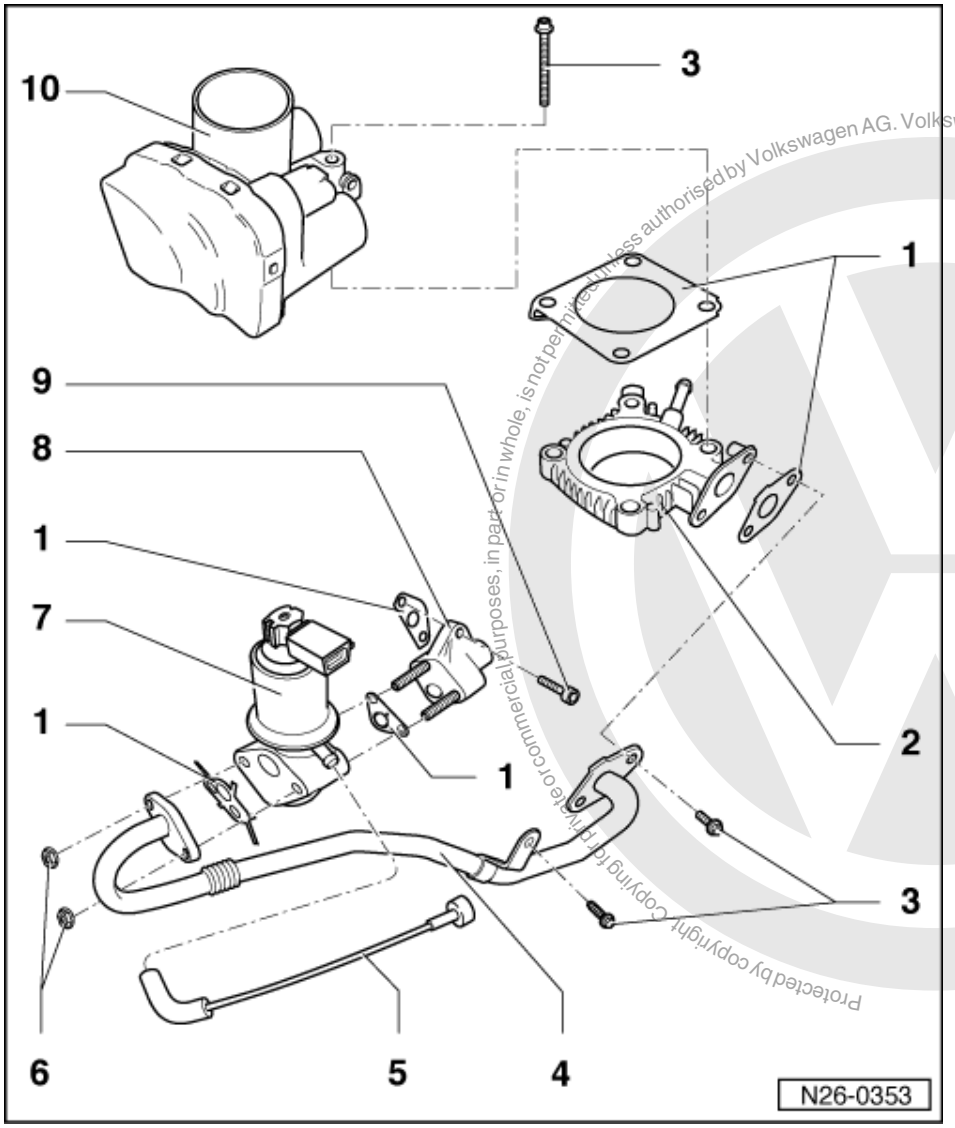

1 Gasket
- Renew

2 Intake connecting flange

3 10 Nm

4 Connecting pipe

Protected by copyright. Copying for private or commercial purposes, in part or in whole, is not permitted unless authorised by Volkswagen AG. Volkswagen AG does not guarantee or accept any liability with respect to the correctness of information in this document. Copyright by Volkswagen AG.
satelettronica

5 Filter
6 20 Nm
7 Exhaust gas recirculation valve (N18)*/** with potentiometer for exhaust gas recirculation (G212)
- Check EGR valve (N18):

=> Repair group 01; Final control diagnosis; Performing final control diagnosis Final control diagnosis Performing final control diagnosis

- Check potentiometer for exhaust gas recirculation (G212) =>Page 156

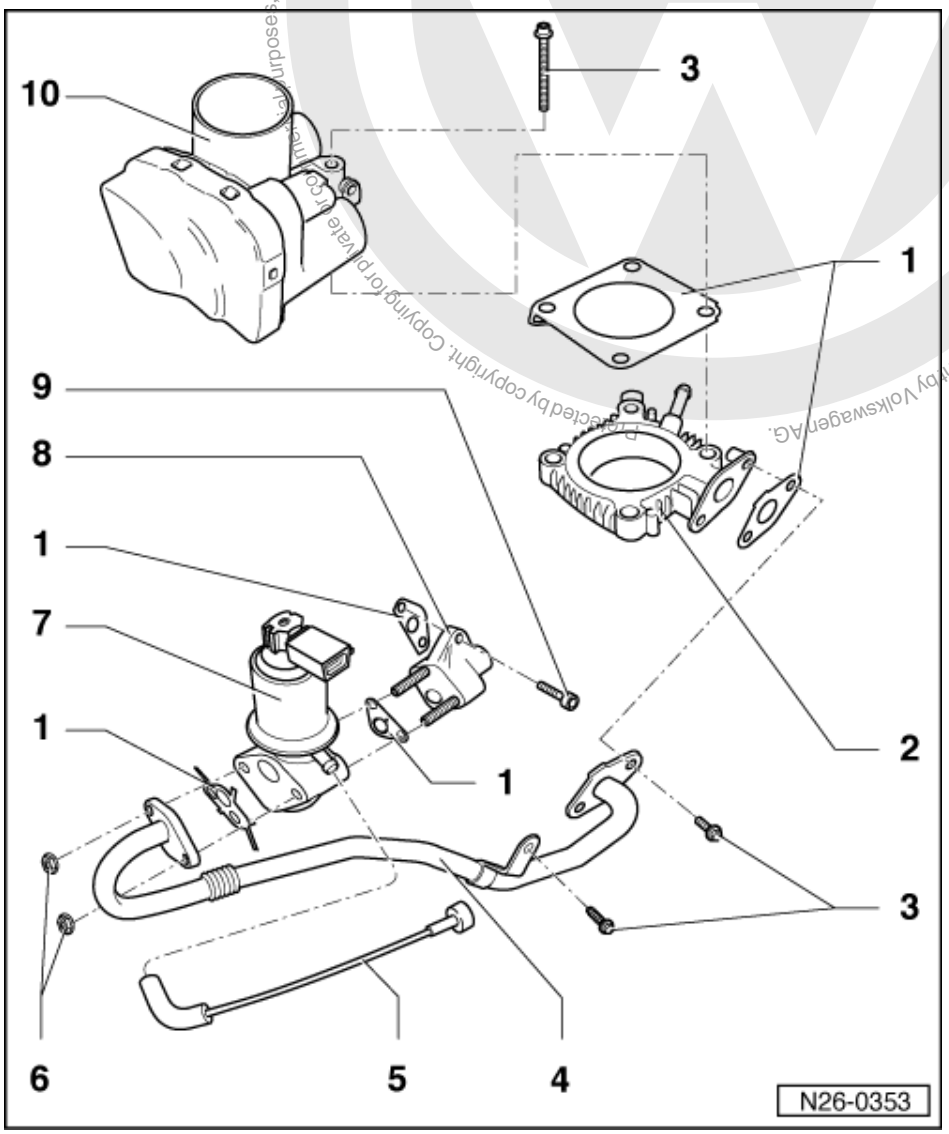

8 Adapter
9 20 Nm
10 Throttle valve control part (J338)*

satelettronica

2.3 - Checking potentiometer for exhaust gas recirculation (G212)

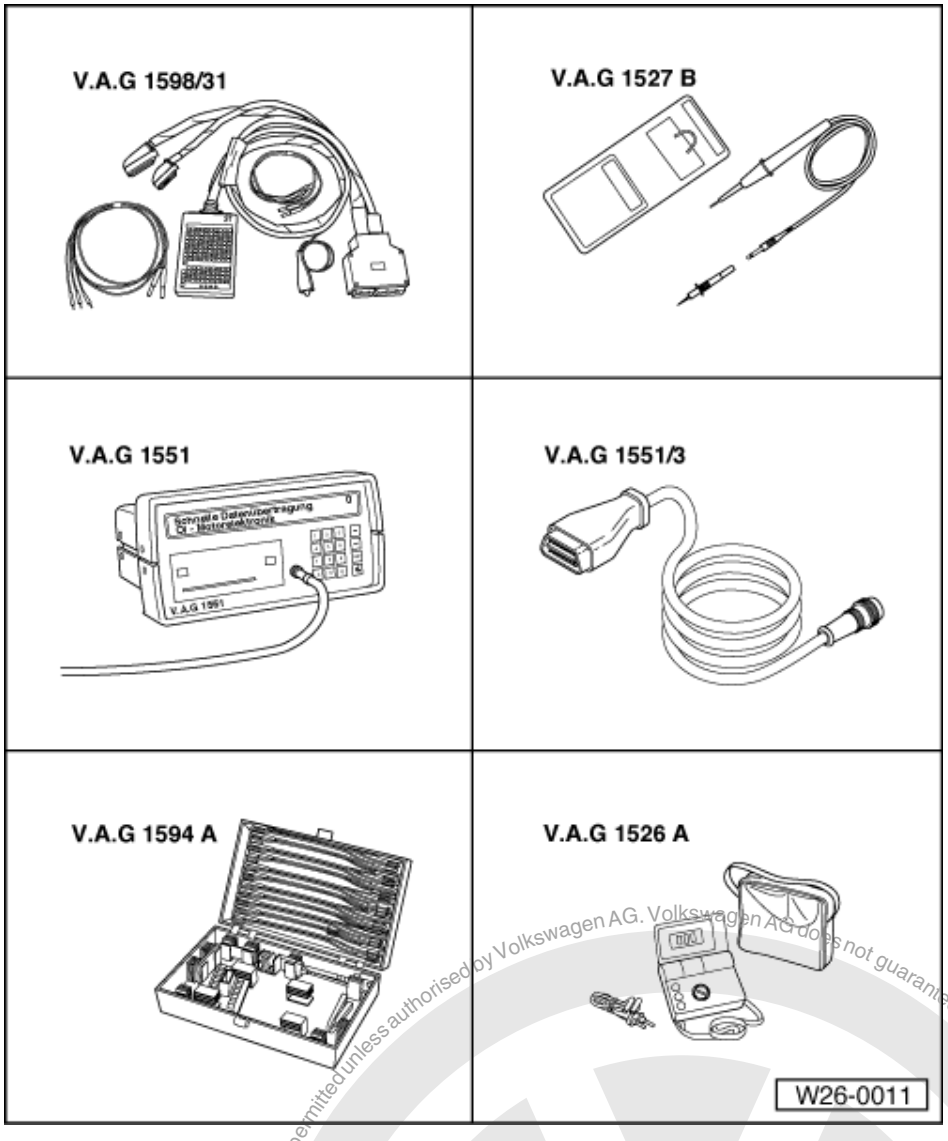

Special tools, workshop equipment, test and measuring appliances and auxiliary items required

- V.A.G 1598/31 Test box
- V.A.G 1527 B Diode test lamp
- Fault reader V.A.G 1551 or vehicle system tester V.A.G 1552 with cable V.A.G 1551/3
- V.A.G 1594 A Adapter set
- V.A.G 1526 Hand multimeter
- Current flow diagram

Protected by copyright. Copying for private or commercial purposes, in part or in whole, is not permitted unless authorised by Volkswagen AG. Volkswagen AG does not guarantee or accept any liability with respect to the correctness of information in this document. Copyright by Volkswagen AG.
satelettronica

Test conditions

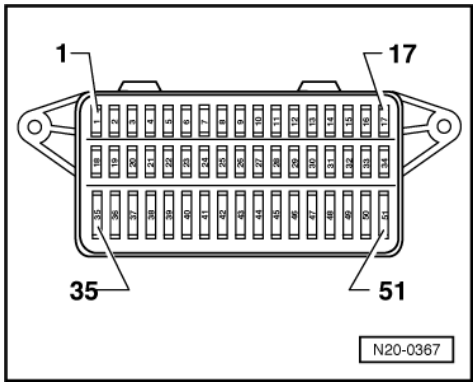

- -> Fuse 30 must be OK.

Test sequence

- Remove 6-pin connector from valve for exhaust gas recirculation => Page 154 , item 7

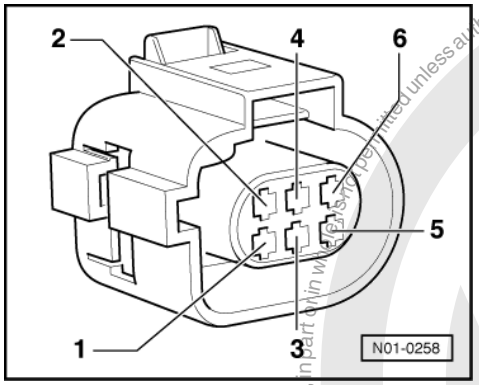

- -> Connect multimeter to contacts 2 and 4 of 6-pin connector for voltage measurement.
- Switch on ignition.
  Specification: min. 4.5 V

If the specification is not attained:

- Switch off ignition.

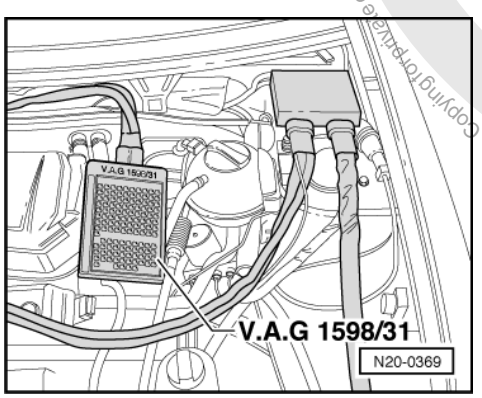

- -> Connect test box V.A.G 1598/31 to control unit wiring harness. The engine control unit remains disconnected.

Protected by copyright. Copying for private or commercial purposes, in part or in whole, is not permitted unless authorised by Volkswagen AG. Volkswagen AG does not guarantee or accept any liability with respect to the correctness of information in this document. Copyright by Volkswagen AG.
satelettronica

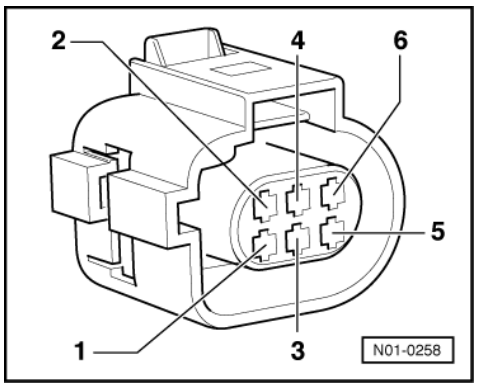

- -> Check wiring for open circuit between test box and 6-pin connector using current flow diagram.
  Contact 2 and test box socket 98
  Contact 4 and test box socket 108
  Contact 6 and test box socket 100
  Wire resistance: max. 1.5ω
- Additionally check wiring for short to one another, and for short to positive or earth.

If the specification is obtained:

- Connect engine control unit to test box V.A.G 1598/31 and reconnect 6-pin connector to EGR valve.
- Connect the fault reader V.A.G 1551 (V.A.G 1552). Then switch ignition on and select engine control unit with the "Address word" 01.

=> Repair group 01; Self-diagnosis general: Connecting fault reader V.A.G 1551 and selecting engine electronics control unit. Self-diagnosis general: Connecting fault reader V.A.G 1551 and selecting engine electronics control unit.

- Initiate final control diagnosis and select EGR valve (N18):

=> Repair group 01; Final control diagnosis; Performing final control diagnosis Final control diagnosis Performing final control diagnosis

- Connect diode test lamp V.A.G 1527 B to test box socket 100 and earth using adapter from V.A.G 1594.
  The LED must flash.
- Proceed with final control diagnosis until completed.
- Press keys 0 and 6 for the "End data transfer" function and confirm input with the Q key.
- Switch off ignition.
- Depending on conditions, renew following components:

LED flashes:

- Renew EGR valve (N18) with potentiometer (G212).

- Erase learnt values and re-adapt engine control unit

=> Repair group 24; Engine control unit; Erasing learnt values and adapting engine control unit to throttle valve control part and EGR valve Engine control unit Erasing learnt values and adapting engine control unit to throttle valve control part and EGR valve

If no wiring fault is detected and the LED does not flash:

- Renew engine control unit.

=> Repair group 24; Engine control unit; Renewing engine control unit Engine control unit Renewing engine control unit

Protected by copyright. Copyright by Volkswagen AG.
Copying for private or commercial purposes, in part or in whole, is not permitted unless authorised by Volkswagen AG. Volkswagen AG does not guarantee or accept any liability with respect to the correctness of information in this document.
satelettronica